TECHNICAL PROPOSAL

BRIDGE PACKAGE 14 Design-Build

Cherokee County, South Carolina

Contract ID 1162220

Submitted by:

lane INFRASTRUCTURE CONSULTING & ENGINEERING

October 24, 2022

For ease of reference and navigation **Blue Bold Underlined Text** indicates links to various items in the Appendix.

Easily Navigate to Previous View:
To return to PREVIOUS VIEW, click ALT + left arrow. You can also set your PDF viewing preferences by following these steps:

1) **View**
2) **Show/Hide**
3) **Toolbar Items,**
4) **Show Page Navigation Tools**
5) **Check "Previous View".**

A back button will appear on your toolbar and can be used to go directly to your previous view.

Bookmarks are also set for your convenience

NAVIGATION

4.1.1. PROJECT DELIVERY & APPROACH

Featured Team's Approach

SCDOT's Bridge Package 14 will provide important infrastructure upgrades to multiple bridges in Cherokee County. Achieving the project goals requires a strong, experienced design-build (DB) team to partner with the Department to address the specific project challenges, which include:

- ✓ Prioritizing the replacement of S-138 over Goucher Creek bridge
- ✓ Avoiding right-of-way (ROW) acquisition at Kings Mountain National Military Park
- ✓ Maintaining project progress to meet all project schedule goals, including milestone dates
- ✓ Minimizing purchase of new ROW & avoiding/minimizing utility impacts

The Lane Construction Corporation (Lane) and design partner Infrastructure Consulting & Engineering, PLLC (ICE) have partnered as the Lane/ICE Team to provide the resources, knowledge, and experience to deliver this project promptly and efficiently. Our solutions are focused on these issues to provide an optimized design and seamless construction process that showcases innovation and added value to SCDOT with reduced impacts, decreased costs, and a shortened project duration, as demonstrated throughout our proposal.

4.1.1.a. Assurances and ability to complete the project within the required timeframe

In developing our project approach during the procurement phase, the Lane/ICE Team's primary goals are to reduce risks and accelerate the project schedule. Our initial analysis has offered several opportunities to accomplish these goals, focused primarily on advancing the design to produce complete preliminary bridge and roadway packages for submission shortly after contract execution.

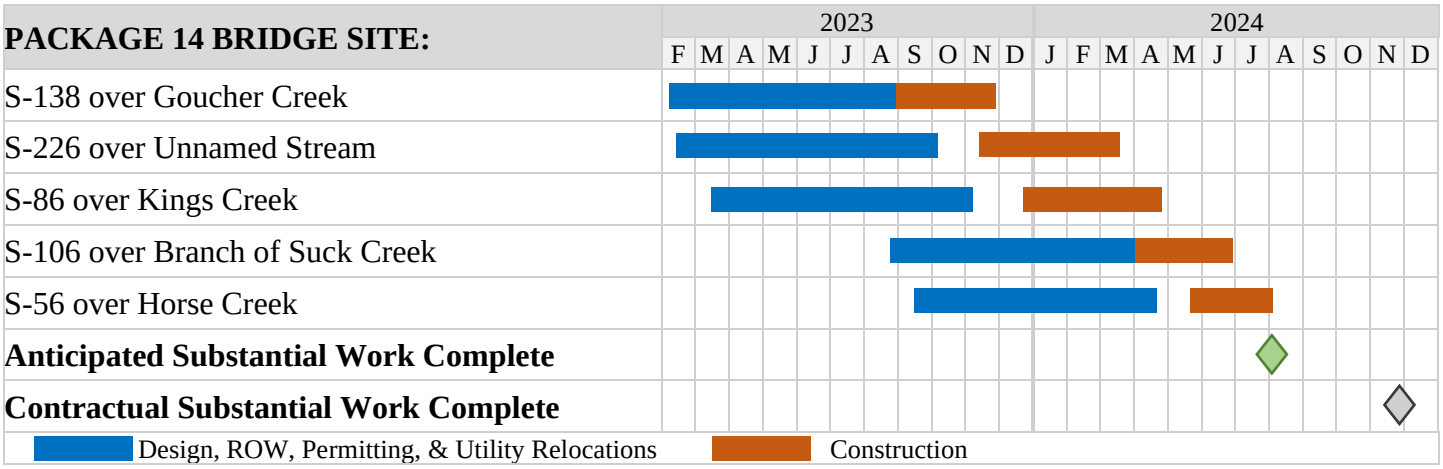

The design team is comprised exclusively of ICE employees, who will self-perform all bridge, roadway, geotechnical, and hydraulic design through final design and RFC plans, as well as utility coordination and permitting. This concentrated team does not need to rely on coordination between multiple firms, optimizing processes and communication to maintain continual progress. Following award, weekly coordination will be scheduled between Project Manager (PM) Jeff Nichols, Assistant PM Matt Miltner, Lead Design Engineer Ray Spence, and other designers at the ICE corporate office in West Columbia, where the Team will integrate for effective communication, coordination, and appropriate input between all design disciplines and construction. Through a phased design approach, our Team will optimize the progression of final construction plans and reports for SCDOT's approval with the goal of completing approved RFC plans for all five sites within 12 months of NTP. As the design progresses, the Team will also strategically locate coordination meetings at ICE's Blacksburg field office to simplify collaboration and integration with the SCDOT District 4 construction office.

With the timely resolution and approval of design plans, construction can begin as soon as possible. The Lane/ICE Team's approach emphasizes early completion by leveraging Lane's established strengths and experience, such as performing work simultaneously on multiple bridges sites. We will begin construction with the Unnamed and Goucher Creek bridges, moving then to Kings Creek, and finishing with concurrent work on Horse Creek and Suck Creek, as shown in the map graphic to the right. Our Team is fully prepared to meet the resource challenges of this project, despite the ongoing nationwide difficulties that the industry is facing regarding labor. Lane's I-85 project in Cherokee County, SC, and I-40/I-77 project in Iredell County, NC, are scheduled for completion in December 2022 and June 2023, respectively, providing a full work force that is ready to mobilize and execute on concurrent bridge sites.

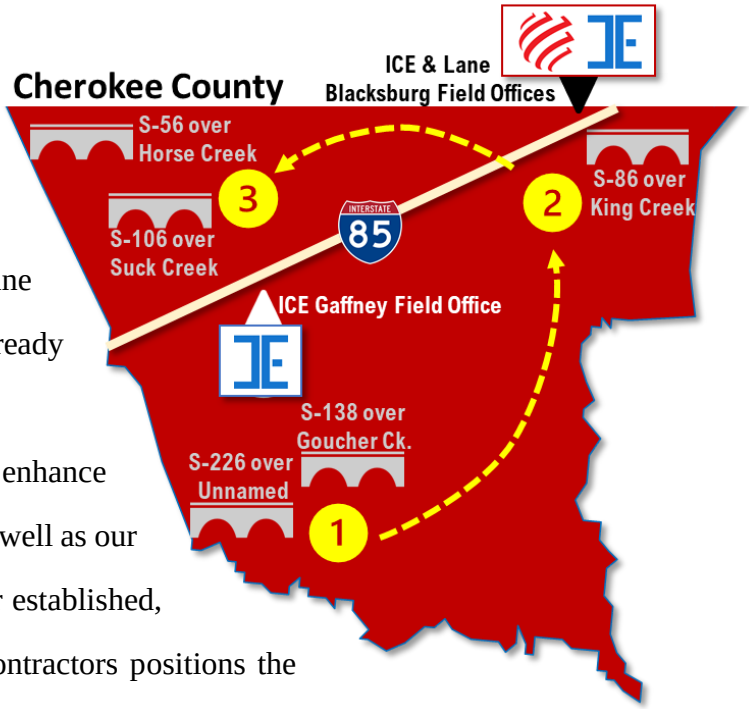

In addition, our strategically located offices will enhance coordination and collaboration between District 4, as well as our field crews and design teams. Coupling this with our established, existing relationships with local suppliers and subcontractors positions the Lane/ICE Team to efficiently and safely deliver this project within the required timeframe.

4.1.1.b. How the Lane/ICE Team's design minimizes the need for new right-of-way

The Lane/ICE Team has been working throughout the procurement phase to determine strategies to minimize the need for new ROW at all bridge sites. **FATC 2,** combined with field investigations and extensive hydraulic modeling, have enabled our Team to maintain or reduce the ROW required at all sites compared to the approach in the conceptual plans.

The Team began by modifying the hydraulic models provided in the RFP based on our own data collection and analysis to verify that our bridge lengths meet all hydraulic design criteria. This process facilitated a design that lowers the existing bridge low chord elevation at three sites. Additionally, we verified that the 75 feet of ROW required at each bridge is set correctly, as well as minimized the ROW needed on the roadway approaches through the additional design considerations listed below.

ADDITIONAL DESIGN CONSIDERATIONS

- Using box beams and cored slabs to reduce superstructure depth to minimize raising the existing roadway grade while meeting hydraulic requirements
- Maintaining existing K-Values where allowable to keep roadway profiles as low as possible and embankment footprints as narrow as possible
- Maximizing guardrail limits to maintain 2:1 slopes for longer lengths in higher fill areas
- Utilizing steepened slopes and compressed shoulders with extra length guardrail posts

ICE's design team performed field investigations at all sites to collect the following data:

- ✓ Verify the survey provided in the RFP for accuracy
- ✓ Determine presence of debris accumulation
- ✓ Determine condition of channel
- ✓ Visually inspect channel/bridge performance
- ✓ Determine condition of drainage structures and ditches
- ✓ Measure depth of channel/structure and freeboard
- ✓ Explore opportunities to improve the hydraulic opening

Picture from Hydro Site Visit (S-86 Over Kings Creek)

The NEPA documents assume that new acquisitions will not have negative effects to resources or landowners and will be located within the project study area. During our weekly pursuit meetings, we discussed impacts such as damages to remainders and ingress/egress requirements with our ROW consultant, Colliers Engineering & Design. Any potential issues were addressed and eliminated with our design. The scope of work requires that the Contractor shall, "Provide sufficient right of way to cover all permanent facilities." Our Team will submit ROW plans for the Department to review that fully comply with all RFP requirements and NEPA assumptions. ***Table 4.1.1.b*** on the following page shows the amount of ROW the Lane/ICE Team anticipates acquiring at each site. Our proposed design results in a net **savings of 0.594 acres** of ROW, which correlates to a **savings of 20%.**

Pictures from Hydro Site Visit (Left to Right: S-106 over Branch of Suck Creek, S-138 over Goucher Creek, & S-56 over Horse Creek)

Conceptual Plans for each site (***APPENDIX A***) include "Bumper Sticker" call-out captions that further describe the Team's approach to reducing the impacts and optimizing the designs. "Bumper Stickers" are also used to denote design exceptions that are included in the RFP and utilized in our design.

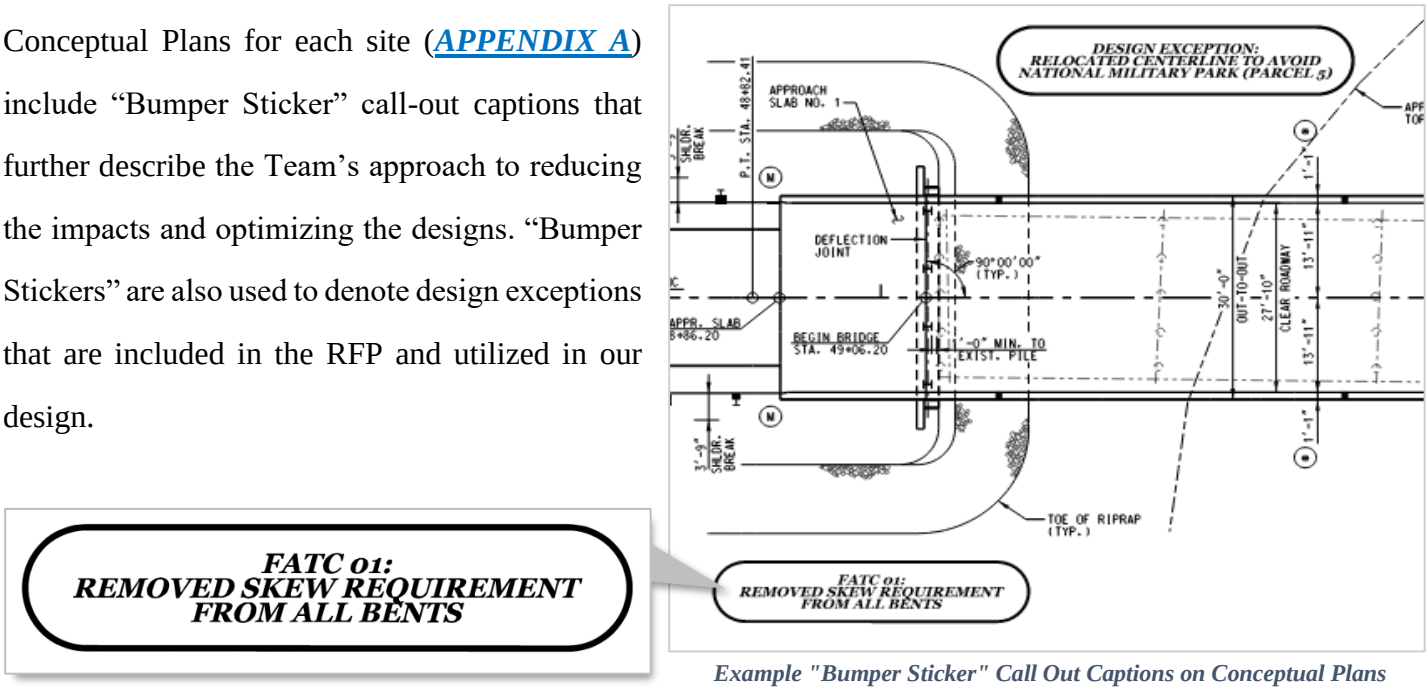

Example "Bumper Sticker" Call Out Captions on Conceptual Plans

Design Team's approach to design and how it minimizes the need for new ROW:

Table 4.1.1.b **Bridge Site**		**Design Approach and Result**	**Required ROW**		**Savings**
			SCDOT	Lane/ICE	
S-138 over Goucher Creek		Optimized roadway profile: ○ Lengthens guardrail to allow 2:1 slopes, minimizing ROW ○ Reduces approach lengths, reducing required ROW from fill impacts Performed extensive hydraulic analysis: ○ Demonstrates option to lower existing bridge low chord elevation, which reduces the amount of roadway approach work required	0.514	0.525	**-0.011**
S-226 over Unnamed Stream		○ Reduced required ROW by 0.236 acres (10,280 SF) ○ Minimized ROW by eliminating the need to shift stream alignments (**FATC 2**) ○ Optimized roadway profile to reduce fill, reducing ROW and stream impacts	0.677	0.441	**.236**
S-86 over Kings Creek		○ Required ROW reduced by 0.248 acres (10,802 SF) ○ Avoided ROW from National Military Park with minimal alignment shift and roadway profile design ○ Utilized steepest slope allowable with geotechnical information provided in Attachment B ○ Performed extensive hydraulic analysis to demonstrate the existing bridge low chord elevation can be lowered, reducing the amount of roadway approach work required	0.586	0.338	**.248**
S-106 over Branch of Suck Creek		○ Required ROW reduced by 0.121 acres (5,270 SF) ○ Utilize **FATC 2** and steepened slopes per RFP Exhibit 4f, 2.2 to eliminate stream impacts and potential ROW impacts with relocation ○ Obtain permissions for driveway reconstruction outside of bridge maintenance ROW requirements	0.611	0.490	**.121**
S-56 over Horse Creek		○ Limited new ROW to bridge maintenance ROW requirements ○ Optimized roadway profile design to reduce approach lengths, reducing required ROW	0.434	0.434	**0**

4.1.1.c. Design submittal process

Design Submittal Process and Anticipated Deliverables

The Lane/ICE Team has developed a **CPM Schedule** that summarizes the sequence of all design submittal packages, SCDOT reviews, ROW acquisitions, and utility relocations activities. The submittals in ***Table 4.1.1.c.*** were derived from our preliminary **CPM Schedule** and illustrate our anticipated submission of no more than two initial submittal packages per month, beginning in March 2023 and ending in December 2023.

Table 4.1.1.c

Bridge Site	**Design Submittal:**
S-138 over Goucher Creek	1. Submittal 000 – Design QC & Submittal Schedule
	2. Detour Plans
	3. ROW & Prelim Bridge
	4. Road & Bridge Final
S-226 over Unnamed Stream	5. ROW & Prelim Bridge
	6. Road & Bridge Final
S-86 over Kings Creek	7. ROW & Prelim Bridge
	8. Road & Bridge Final
S-106 over Branch of Suck Creek	9. ROW & Prelim Bridge
	10. Road & Bridge Final
S-56 over Horse Creek	11. ROW & Prelim Bridge
	12. Road & Bridge Final

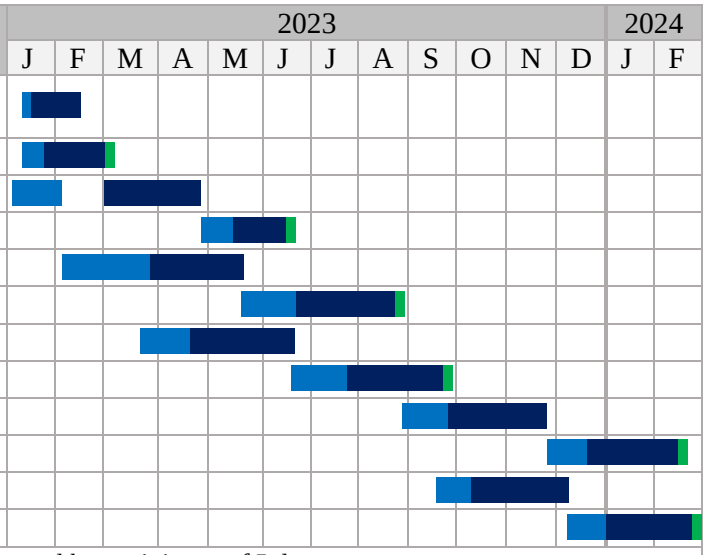

Each bridge submittal will be separated by a minimum of 5 days.

Production SCDOT Review/ Comment Resolution RFC Plans

All packages will contain the deliverables listed in Exhibit 4z of the RFP for Preliminary/ROW and Final Plans. Shortly after award, the design team will meet with SCDOT's DB Group to review the proposed Design Quality Control Plan, which includes the Design Submittal sequencing procedures and our detailed **CPM Schedule** for the Project Design Deliverables (Submittal 000). The flow of submittals is shown in the schedule below. The design submittal process will be monitored using Bluebeam Studio® software, our preferred document control system. This system assigns accountability and ensures SCDOT's review is complete and efficient with key features as described below. Preliminary design and plan production will begin at our own risk immediately after notification of award as further evidence of our commitment to the timely delivery of the Project.

Key Features of Our Design Submittal Process
✓ Independent QA/QC for all design submittals prior to submission to SCDOT to ensure RFP compliance and minimize SCDOT review comments.
✓ Comprehensive constructability review by the Contractor to improve design and minimize RFIs during construction.
✓ All design submittals will be uploaded to SCDOT's ***ProjectWise*** system in PDF format. Plan submissions will be sized at 11"x17" so that they may be printed on a standard printer or any plotter at a specific scale.
✓ The design submission schedule will be posted to SCDOT's ***ProjectWise*** site and updated monthly.
✓ Facilitate monthly design meeting/conference call to allow for status updates of the design, to provide a forum for asking questions related to the design during review, and to serve as an opportunity for clarification/discussion of comments.

4.1.2. Innovation and Added Value to SCDOT and the Public

A summary of the Lane/ICE Team's innovative and added value items described below, including those in the previously authorized Formal ATCs, is included in **Appendix B. Quality Credit Matrix.**

Bridge Site	Innovation and Added Value Items	Photo of Existing Bridge
S-138 over Goucher Creek	Eliminated interior bent (3-span to 2-span bridge) ○ Accelerates bridge construction and reduces cost ○ Reduces potential scour and long-term maintenance ○ Reduces the potential for debris accumulation and long-term maintenance Optimized roadway profile ○ Reduces overall approach lengths, which reduces schedule and construction costs Accelerated schedule ○ Submit preliminary plans on NTP ○ Begin utility coordination at award to expedite relocation process for Goucher Water (Tri-County Utilities) waterline and AT&T (Both attached to existing bridge)	
S-226 over Unnamed Stream	Optimized roadway profile (**FATC 2**) ○ Reduces sliver fills on slopes and long-term maintenance ○ Reduces ROW impacts ○ Reduces stream impacts ○ Eliminates need for additional borrow, which reduces hauling on public roads	
S-86 over Kings Creek	Eliminated skew (**FATC 1**) ○ Eliminates interior bent (3-span to 2-span) ▪ Accelerates bridge construction and reduces construction cost ▪ Reduces potential scour and long-term maintenance ▪ Reduces the potential for debris accumulation and long-term maintenance Optimized roadway profile ○ Reduces approach length on west side	
S-106 over Branch of Suck Creek	Optimized roadway profile (**FATC 2**) ○ Reduces ROW impacts ○ Reduces stream impacts ○ Reduces need for additional borrow, which reduces hauling on public roads ○ Reduces overall approach lengths reduces schedule and construction costs	
S-56 over Horse Creek	Optimized roadway profile ○ Reduces approach lengths ○ Reduces overall earthwork	

Authorized FATCs:

INNOVATION / SOLUTION	ADDED VALUES / BENEFITS
FATC 1 **S-86 Two Span Bridge with No Skew**	• Eliminates interior bent on the outside bank of a meander bend that is currently experiencing erosion and damage along the channel bank • Eliminates potential for local pier scour on the overbank • Accelerates bridge construction • Reduced construction cost by eliminating interior bent and decreasing quantity of beams to be delivered and placed • Reduces the potential for debris accumulation

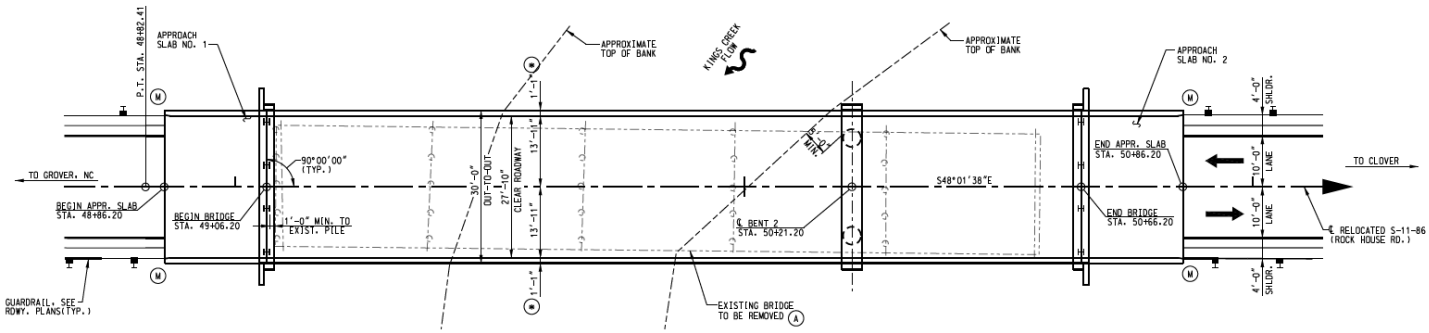

FATC 2 **Alternative detail to protect roadway fill slopes**	• Significantly reduces and potentially eliminates stream impacts at S-226 over Unnamed Stream and S-106 over Branch of Suck Creek (see **Table 4.1.1.b)** • Reduced impacts to WOUS will allow construction to begin sooner • Eliminates the need to relocate streams, decreases the required ROW at both sites • Reduces mitigation and construction cost

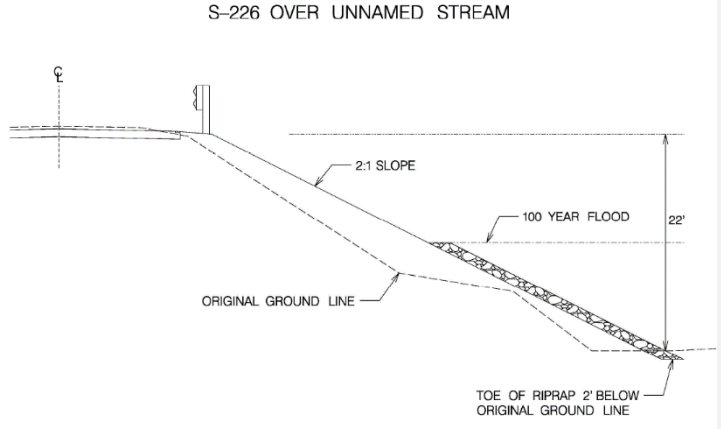

Site Location	SCDOT Impacts	SCDOT Mitigation Credits/Costs	Proposed Impacts (LF)	Proposed Mitigation Credits/Cost	Cost Savings
S-226 over Unnamed	270	1404 / $245,700	51	254/$44,468	$ 201,232
S-106 over Suck Creek	90	469 / $82,075	40	208/$36,402	$ 45,673
				TOTAL SAVINGS	**$ 246,905**

FATC 3* **Additional pavement option for bridge approaches – CMRB** **Evaluating for potential use at each site.*	• Cement Modified Recycled Base provides a more efficient pavement section with a Structural Number (SN) higher than RFP proposed pavement options. • Increases quality of final product by eliminating the need to perform full depth patching on the roadway approaches since the CMRB operation will reconstruct the entire roadway section.

Considerations and mitigation strategies to high-risk items:

CRITICAL ISSUES / PROBLEMS / POTENTIAL IMPACT	THE LANE/ICE TEAM MITIGATION STRATEGIES
RISK A. MEETING PROJECT SCHEDULE GOALS AND MILESTONE DATES	
Begin Construction of S-138 over Goucher Creek within 180 days of NTP	• Submit ROW and Preliminary Bridge Package on NTP • Coordinate with precast fabricator to provide beam shop drawings in final plans to shorten the procurement/fabrication of beams • Early and frequent coordination with Goucher Water and AT&T to facilitate timely relocations (ICE has met with utilities to incorporate realistic relocation timelines into our **CPM Schedule**)
Utility Relocations Impact or Delay to Start of Construction	• During the pursuit phase, the Lane/ICE Team proactively contacted all potentially impacted utility companies to discuss relocation timelines. These activities and conservative durations are included in our **CPM Schedule** and were used to help determine the sequence of design and construction.
Appraisals / Condemnation can delay acquisitions and schedule	• Prioritize ROW submittals to allow ROW acquisition to begin as soon as possible for critical sites / tracts • Obtain right-of-entry to avoid construction delays • Order appraisal immediately if the property owner is not going to accept the cost estimate
Foundation Installation High-Risk Construction Activity for Schedule	• Reduced interior bents by 50% compared to SCDOT conceptual bridge plans. • Drilled shaft locations were strategically selected and planned for ease of access and installation.
Detour Signage installed within 45 days of NTP	• ICE will begin detour plan preparation on or before contract execution to allow detour plans to be submitted at risk prior to NTP
RISK B. MINIMIZING IMPACTS TO SCDOT RIGHT-OF-WAY ACQUISITION COSTS	
ROW Acquisition Costs SCDOT may have additional, unplanned ROW costs	• Optimized roadway design to reduce the needed ROW at three sites (**See Table 4.1.1.b**) • Obtain permissions where possible to limit ROW costs • Design allows for utilities to be relocated within existing or new ROW
RISK C. AVOIDING OR MINIMIZING IMPACTS TO UTILITIES	
Broad River Electric at Kings Creek Potential for full relocations	• ICE design and Lane construction means and methods minimize relocation by only moving a single pole approximately 15 feet in line.
Duke Energy Distribution at S-56 over Horse Creek Potential for Relocation	• ICE design and Lane construction means and methods eliminate the need for a relocation of Duke Energy Distribution at this site.

CONCEPTUAL PLANS

A.1 – Roadway Plans

S-138 over Goucher Creek

S-226 over Unnamed Stream

S-86 over Kings Creek

S-106 over Branch of Suck Creek

S-56 over Horse Creek

APPENDIX A

SHEET NO.	TOTAL SHEETS
1	4

INDEX OF SHEETS

SHEET NO.	DESCRIPTION	SHEET
1	TITLE SHEET	1
1A	RIGHT-OF-WAY TITLE SHEET	OMITTED
2	SUMMARY OF ESTIMATED QUANTITIES	OMITTED
3	TYPICAL SECTIONS	1
4	RIGHT-OF-WAY DATA SHEET	OMITTED
4A	PROPERTY STRIP MAP	OMITTED
5	GENERAL CONSTRUCTION NOTE	OMITTED
5A – 5B	REFERENCE DATA SHEET	1
6	PLAN AND PROFILE SHEET	1
TC1	TRAFFIC CONTROL SHEET	OMITTED
PM1	PAVEMENT MARKING AND SIGNING SHEET	OMITTED
EC1 – EC2	EROSION CONTROL SHEETS	OMITTED
U1	UTILITY SHEET	OMITTED
X1	CROSS SECTIONS	OMITTED
		4

South Carolina Department of Transportation

PROPOSED PLANS FOR

CHEROKEE COUNTY

PROJECT ID: 1162220

S-138 (GOUCHER SCHOOL ROAD)

ROADWAY APPROACHES TO BRIDGE OVER GOUCHER CREEK

BRIDGE PLANS BOUND UNDER A SEPARATE COVER

Design Reference for these plans is the:
2021
SCDOT "Roadway Design Manual"

Hydraulic Design Reference for these plans is the:
2009
Edition of SCDOT's "Requirements for Hydraulic Design Studies"

PROJECT: 1162220 S-138
(GROUCHER SCHOOL ROAD)
STA. 86+40.00 TO STA. 91+36.00
SEE SHEET 6

CONSTRUCT 120.00' PRESTRESSED CONCRETE BOX BEAM BRIDGE
STA. 88+37.00 TO STA. 89+57.00
(SEE BRIDGE PLANS)

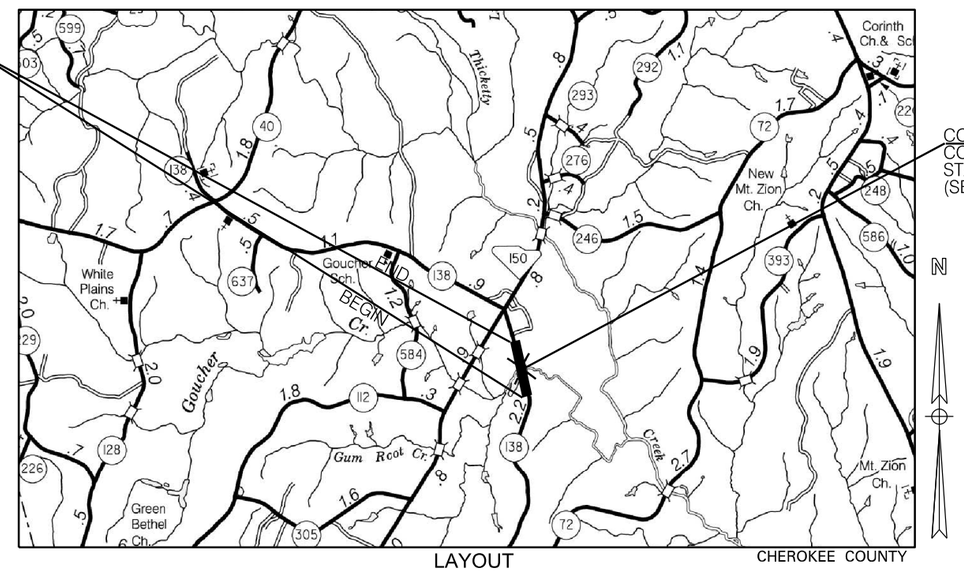

LAYOUT
NOT TO SCALE

CHEROKEE COUNTY

3 DAYS BEFORE DIGGING IN SOUTH CAROLINA
CALL 811
SOUTH CAROLINA 811 (SC811)
WWW.SC811.COM
ALL UTILITIES MAY NOT BE A MEMBER OF SC811

RAILROAD INVOLVEMENT?
YES / NO

NET LENGTH OF ROADWAY	0.072	MILES
NET LENGTH OF BRIDGES	0.022	MILES
NET LENGTH OF PROJECT	0.094	MILES
LENGTH OF EXCEPTIONS	0.000	MILES
GROSS LENGTH OF PROJECT	0.094	MILES

TRAFFIC DATA

2020 ADT 750

2040 ADT 1095

TRUCKS 8 %

NOTE: EXCEPT AS MAY BE OTHERWISE SPECIFIED ON THE PLANS OR IN THE SPECIAL PROVISIONS, ALL MATERIALS AND WORKMANSHIP ON THIS PROJECT SHALL CONFORM TO THE SOUTH CAROLINA DEPARTMENT OF TRANSPORTATION STANDARD SPECIFICATIONS FOR HIGHWAY CONSTRUCTION (2007 EDITION) AND THE STANDARD DRAWINGS FOR ROAD CONSTRUCTION IN EFFECT AT THE TIME OF FINAL RFP.

lane

INFRASTRUCTURE CONSULTING & ENGINEERING

ENGINEER OF RECORD

PRELIMINARY
NOT FOR CONSTRUCTION

FOR CONSTRUCTION : DATE

$$user$$
dge Package 14\S-138 over Goucher Creek\Roadway\PLANS\SHT_01.dgn
10/19/2022

std. form3.dgn

FED. RD. DIV. NO.	STATE	COUNTY	PROJECT ID	ROAD / ROUTE NO.	SHEET NO.
3	SC	CHEROKEE	1162220	S–138	3

■ VARIABLE – SEE PLANS & CROSS SECTIONS

* ADD 3.75 WHERE GUARDRAIL IS ERECTED

PROVIDE NON–MOW STRIP FOR GUARDRAIL IN ACCORDANCE WITH STD. DWG. 805–525–01

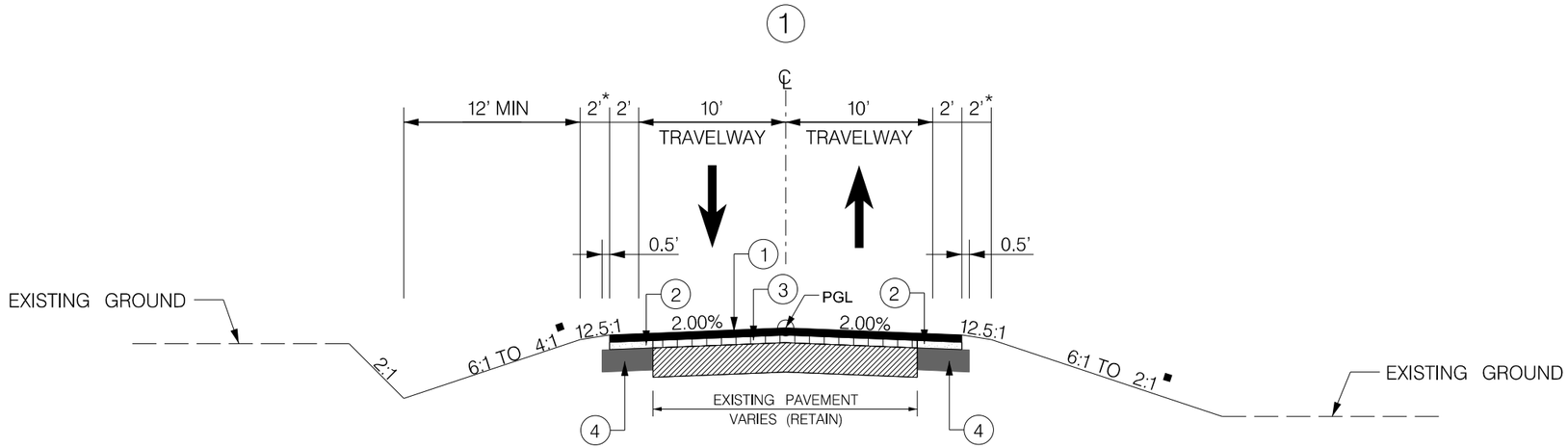

USE THIS SECTION
S–138 (GOUCHER SCHOOL ROAD)
STA. 86+40.00 TO STA. 88+17.00
STA. 89+77.00 TO STA. 90+40.00

①	HOT MIX ASPHALT SURFACE COURSE
②	HOT MIX ASPHALT INTERMEDIATE COURSE
③	VARIABLE HOT MIX ASPHALT FOR BUILDUP
④	HOT MIX ASPHALT BASE COURSE OR GABC

SEE RFP EXHIBIT 4C FOR PAVEMENT STRUCTURE

lane

INFRASTRUCTURE CONSULTING & ENGINEERING

FUNCTIONAL CLASSIFICATION

RURAL MAJOR COLLECTOR

RTE. S–138	DESIGN SPEED	
MPH	FROM STA.	TO STA.
50	86+40.00	91+36.00
EXCEPTIONS TO DESIGN SPEED		

PRELIMINARY
NOT FOR CONSTRUCTION

N.T.S.

REV. NO.	BY	DATE	DESCRIPTION OF REVISION
7			
6			
5			
4			
3			
2			
1			

SOUTH CAROLINA DEPARTMENT OF TRANSPORTATION

TYPICAL SECTION

S–138 (GOUCHER SCHOOL ROAD)
OVER GOUCHER CREEK

Z:\Projects\22-61Bridge Package 14\S-138 over Goucher Creek\Roadway\PLANS\SHT_03.dgn
10/19/2022

FED. RD. DIV. NO.	STATE	COUNTY	PROJECT ID	ROAD / ROUTE NO.	SHEET NO.
3	SC	CHEROKEE	1162220	S-138	5A

Beginning chain S138 description

Point 6 N 1,142,066.6006 E 1,792,286.1476 Sta 71+09.20

Course from 6 to PC S138A N 18° 52' 21.96" E Dist 9.9999

Curve Data

Curve S138A
P.I. Station 73+97.57 N 1,142,339.4668 E 1,792,379.4257
Delta = 33° 53' 39.44" (LT)
Degree = 6° 16' 19.17"
Tangent = 278.3693
Length = 540.4071
Radius = 913.5181
External = 41.4713
Long Chord = 532.5617
Mid. Ord. = 39.6704
P.C. Station 71+19.20 N 1,142,076.0629 E 1,792,289.3822
P.T. Station 76+59.61 N 1,142,608.3238 E 1,792,307.2774
C.C. N 1,142,371.5364 E 1,791,424.9756
Back = N 18° 52' 21.96" E
Ahead = N 15° 01' 17.49" W
Chord Bear = N 1° 55' 32.23" E

DS = RETAIN EXIST.
cMAX = RETAIN EXIST.
c = RETAIN EXIST.
LG-PC = RETAIN EXIST.
LG-PT = RETAIN EXIST.

Course from PT S138A to 16 N 15° 01' 17.49" W Dist 2,826.4626

Point 16 N 1,145,338.2020 E 1,791,574.7095 Sta 104+86.07

Ending chain S138 description

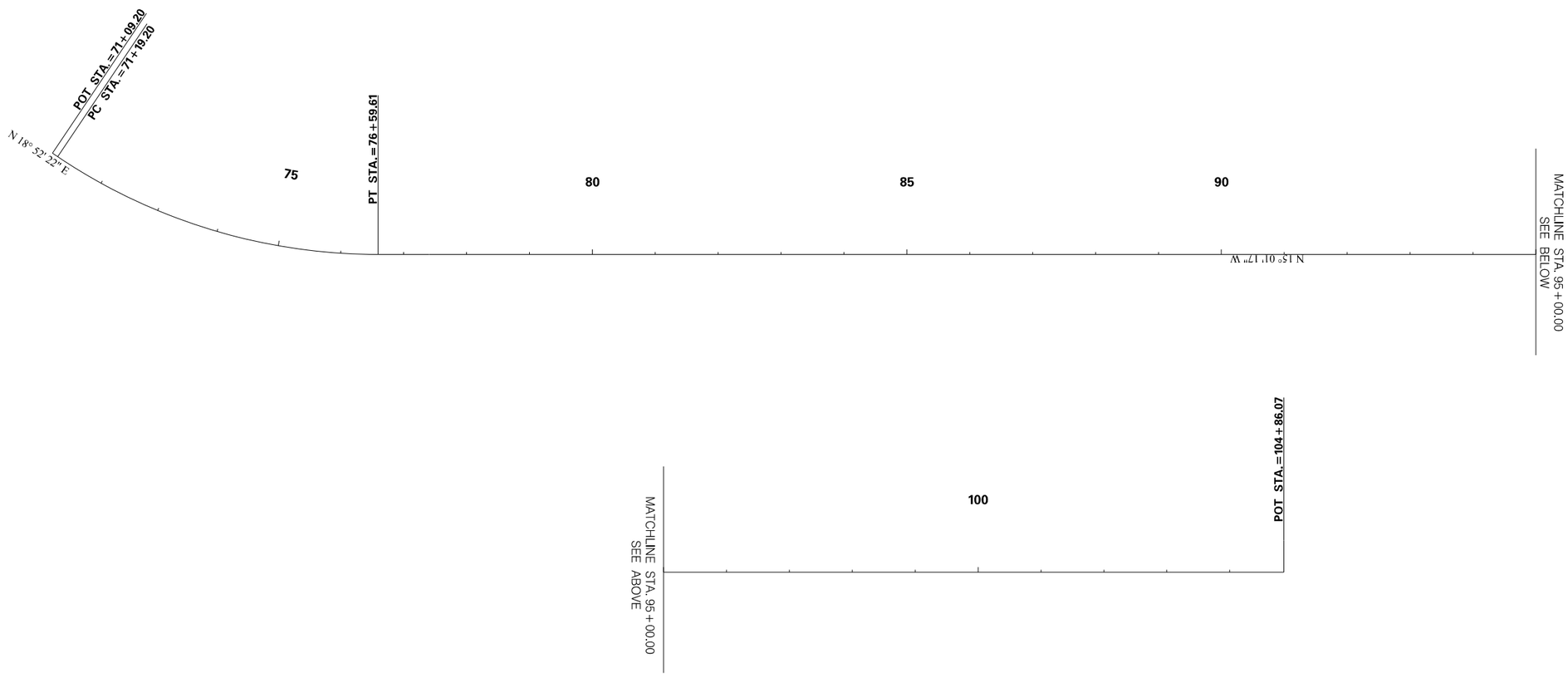

lane

0 50' 100' 200'
SCALE : 1" = 100'

INFRASTRUCTURE
CONSULTING & ENGINEERING

PRELIMINARY
NOT FOR CONSTRUCTION

SCALE: 1" = 100'

REV. NO.	BY	DATE	DESCRIPTION OF REVISION
7			
6			
5			
4			
3			
2			
1			

SOUTH CAROLINA DEPARTMENT OF TRANSPORTATION

REFERENCE DATA SHEET

S-138 (GOUCHER SCHOOL ROAD)
OVER GOUCHER CREEK

Z:\Projects\22-6\Bridge Package 14\S-138 over Goucher Creek\Roadway\PLANS\SHT_05A.dgn
10/19/2022

FED. RD. DIV. NO.	STATE	COUNTY	PROJECT ID	ROAD / ROUTE NO.	SHEET NO.
3	SC	CHEROKEE	1162220	S-138	6

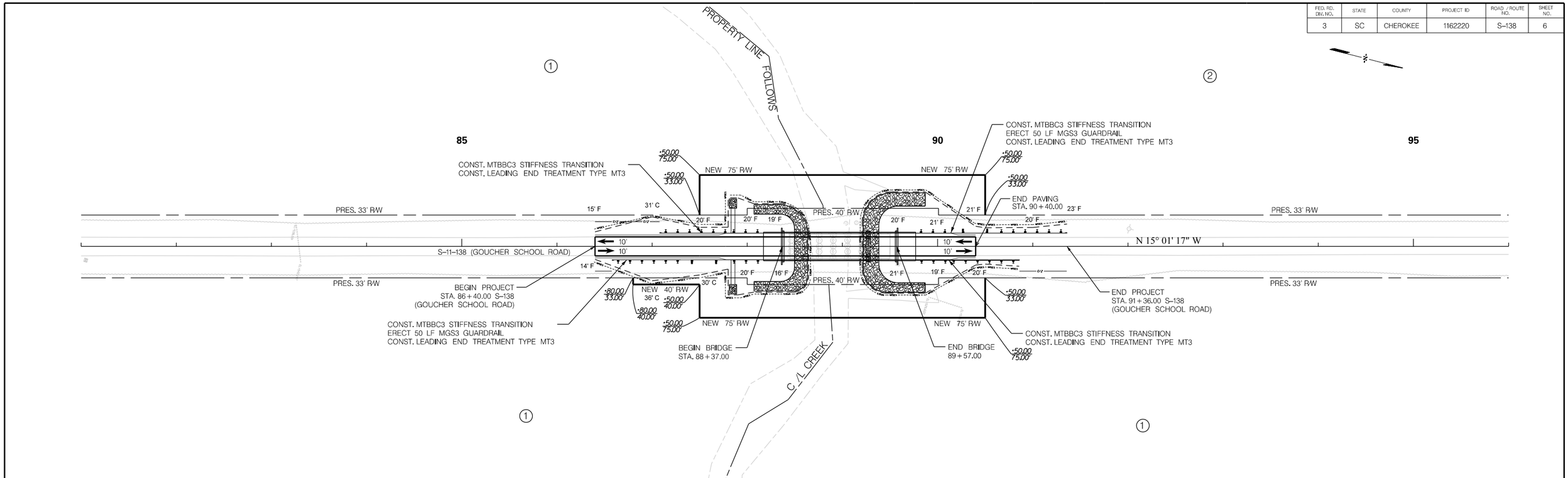

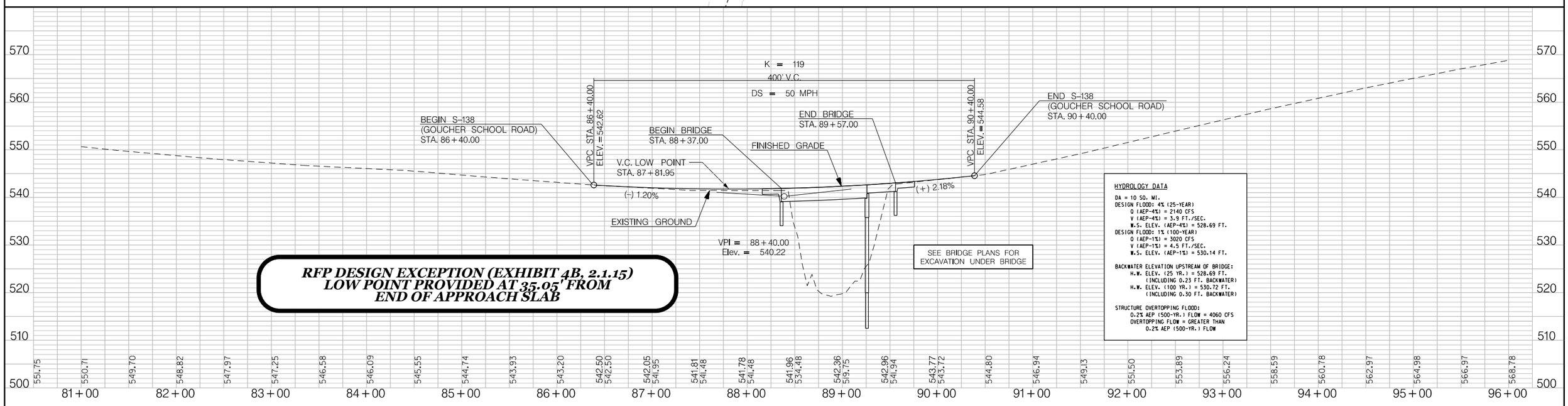

lane

0 25' 50' 100'
SCALE : 1" = 50'

ALIGNMENT CONTROL CAN BE FOUND ON REFERENCE DATA SHEET 5A & 5B

INFRASTRUCTURE
CONSULTING & ENGINEERING

PRELIMINARY
NOT FOR CONSTRUCTION

HORIZONTAL SCALE: 1" = 50' VERTICAL SCALE: 1" = 10'

REV. NO.	BY	DATE	DESCRIPTION OF REVISION
7			
6			
5			
4			
3			
2			
1			

SOUTH CAROLINA DEPARTMENT OF TRANSPORTATION

PLAN AND PROFILE SHEET

S-138 (GOUCHER SCHOOL ROAD)
OVER GOUCHER CREEK

Z:\Projects\22-6\Bridge Package 14\S-138 over Goucher Creek\Roadway\PLANS\SHT_06.dgn
10/19/2022

SHEET NO.	TOTAL SHEETS
1	14

INDEX OF SHEETS

SHEET NO.	DESCRIPTION	SHEET
1	TITLE SHEET	1
1A	RIGHT-OF-WAY TITLE SHEET	OMITTED
2	SUMMARY OF ESTIMATED QUANTITIES	OMITTED
3	TYPICAL SECTIONS	1
4	RIGHT-OF-WAY DATA SHEET	OMITTED
4A	PROPERTY STRIP MAP	OMITTED
5	GENERAL CONSTRUCTION NOTE	OMITTED
5A	REFERENCE DATA SHEET	1
6	PLAN AND PROFILE SHEET	1
TC1	TRAFFIC CONTROL SHEET	OMITTED
PM1	PAVEMENT MARKING AND SIGNING SHEET	OMITTED
EC1 – EC2	EROSION CONTROL SHEETS	OMITTED
U1	UTILITY SHEET	OMITTED
X1 – X10	CROSS SECTIONS	10
		14

South Carolina Department of Transportation

PROPOSED PLANS FOR

CHEROKEE COUNTY

PROJECT ID: 1162220

S-226 (HAMMET GROVE ROAD)

ROADWAY APPROACHES TO BRIDGE OVER UNNAMED STREAM

BRIDGE PLANS BOUND UNDER A SEPARATE COVER

Design Reference for these plans is the:
2021
SCDOT "Roadway Design Manual"

Hydraulic Design Reference for these plans is the:
2009
Edition of SCDOT's "Requirements for Hydraulic Design Studies"

PROJECT: 1162220 S-226 (HAMMET GROVE ROAD)
STA. 161+13.00 TO STA. 167+00.00
SEE SHEET 6

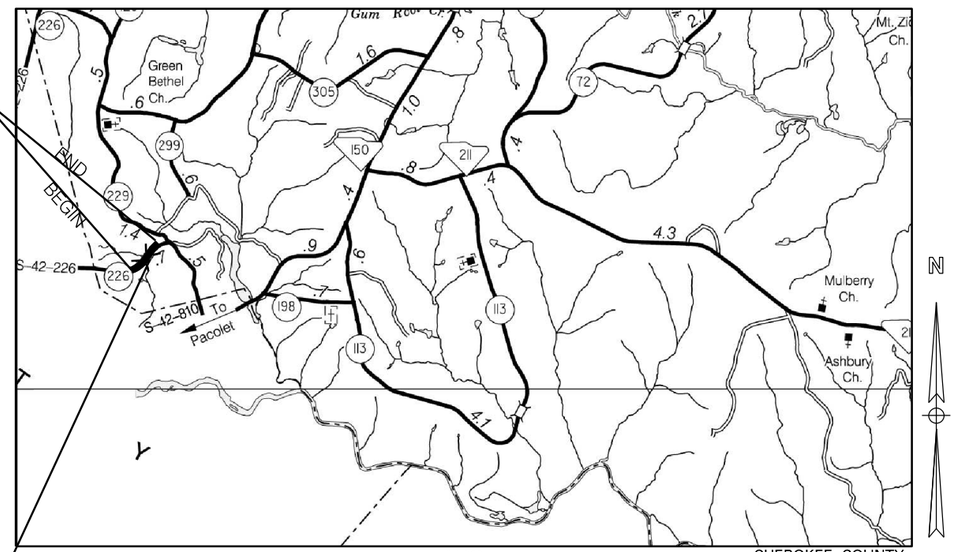

LAYOUT
NOT TO SCALE

CHEROKEE COUNTY

CONSTRUCT 80.00' PRESTRESSED CONCRETE BOX BEAM BRIDGE
STA. 161+98.00 TO STA. 162+78.00
(SEE BRIDGE PLANS)

3 DAYS BEFORE DIGGING IN SOUTH CAROLINA
CALL 811
SOUTH CAROLINA 811 (SC811)
WWW.SC811.COM
ALL UTILITIES MAY NOT BE A MEMBER OF SC811

RAILROAD INVOLVEMENT?
YES / (NO)

TRAFFIC DATA

2020	ADT	200	
2040	ADT	256	
TRUCKS		5	%

NET LENGTH OF ROADWAY	0.096	MILES
NET LENGTH OF BRIDGES	0.015	MILES
NET LENGTH OF PROJECT	0.111	MILES
LENGTH OF EXCEPTIONS	0.000	MILES
GROSS LENGTH OF PROJECT	0.096	MILES

NOTE: EXCEPT AS MAY BE OTHERWISE SPECIFIED ON THE PLANS OR IN THE SPECIAL PROVISIONS, ALL MATERIALS AND WORKMANSHIP ON THIS PROJECT SHALL CONFORM TO THE SOUTH CAROLINA DEPARTMENT OF TRANSPORTATION STANDARD SPECIFICATIONS FOR HIGHWAY CONSTRUCTION (2007 EDITION) AND THE STANDARD DRAWINGS FOR ROAD CONSTRUCTION IN EFFECT AT THE TIME OF FINAL RFP.

lane

INFRASTRUCTURE CONSULTING & ENGINEERING

ENGINEER OF RECORD

PRELIMINARY
NOT FOR CONSTRUCTION

FOR CONSTRUCTION : DATE

$$user$$
ge Package 14\S-226 over Unnamed Stream\Roadway\PLANS\SHT_01.dgn
10/20/2022

std_form13.dgn

FED. RD. DIV. NO.	STATE	COUNTY	PROJECT ID	ROAD / ROUTE NO.	SHEET NO.
3	SC	CHEROKEE	1162220	S–226	3

■ VARIABLE – SEE PLANS & CROSS SECTIONS

* ADD 3.75 WHERE GUARDRAIL IS ERECTED EXCEPT IN AREAS OF COMPRESSED SHOULDER GUARDRAIL

PROVIDE NON–MOW STRIP FOR GUARDRAIL IN ACCORDANCE WITH STD. DWG. 805–525–01

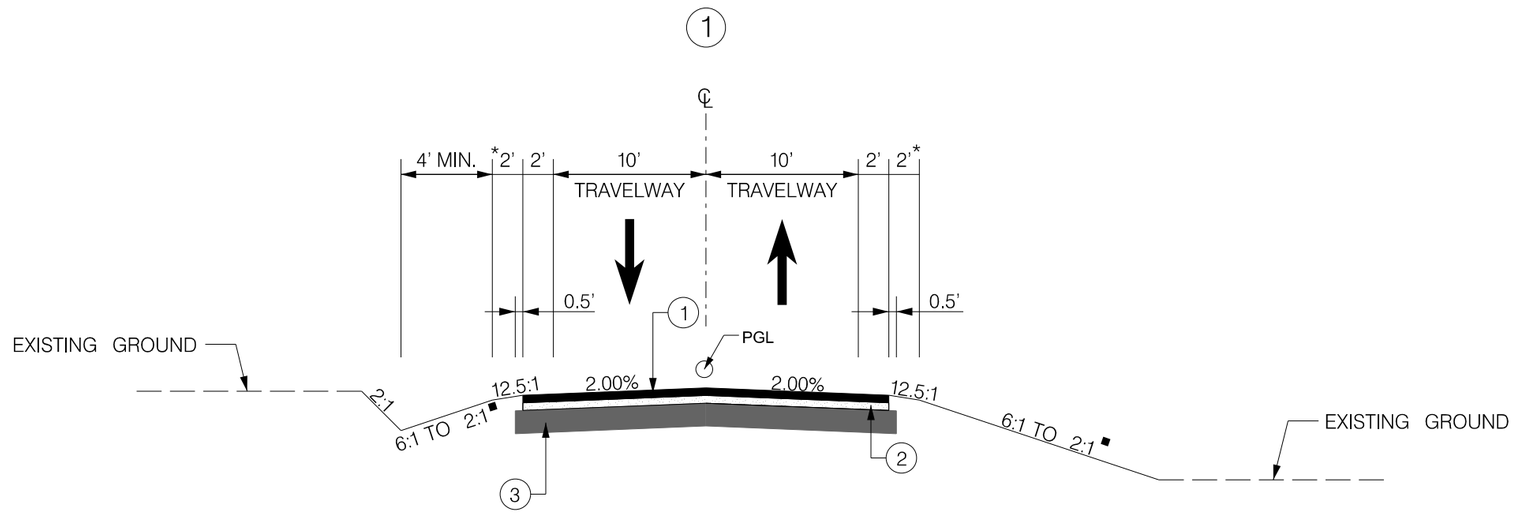

USE THIS SECTION
S–226 (HAMMETT GROVE ROAD)
STA. 161+13.00 TO STA. 161+78.00
STA. 162+98.00 TO STA. 167+00.00

①	HOT MIX ASPHALT SURFACE COURSE
②	HOT MIX ASPHALT INTERMEDIATE COURSE
③	HOT MIX ASPHALT BASE COURSE OR GABC

SEE RFP EXHIBIT 4C FOR PAVEMENT STRUCTURE

lane

INFRASTRUCTURE CONSULTING & ENGINEERING

FUNCTIONAL CLASSIFICATION	RTE. S–226 DESIGN SPEED		
	MPH	FROM STA.	TO STA.
	35	161+13.00	167+00.00
RURAL LOCAL GROUP 4	EXCEPTIONS TO DESIGN SPEED		

PRELIMINARY
NOT FOR CONSTRUCTION

N.T.S.

REV. NO.	BY	DATE	DESCRIPTION OF REVISION
7			
6			
5			
4			
3			
2			
1			

SOUTH CAROLINA DEPARTMENT OF TRANSPORTATION

TYPICAL SECTION

S–226 (HAMMET GROVE ROAD) OVER UNNAMED STREAM

Z:\Projects\22-6\Bridge Package 14\S-226 over Unnamed Stream\Roadway\PLANS\SHT_03.dgn
10/20/2022

FED. RD. DIV. NO.	STATE	COUNTY	PROJECT ID	ROAD / ROUTE NO.	SHEET NO.
3	SC	CHEROKEE	1162220	S-226	5A

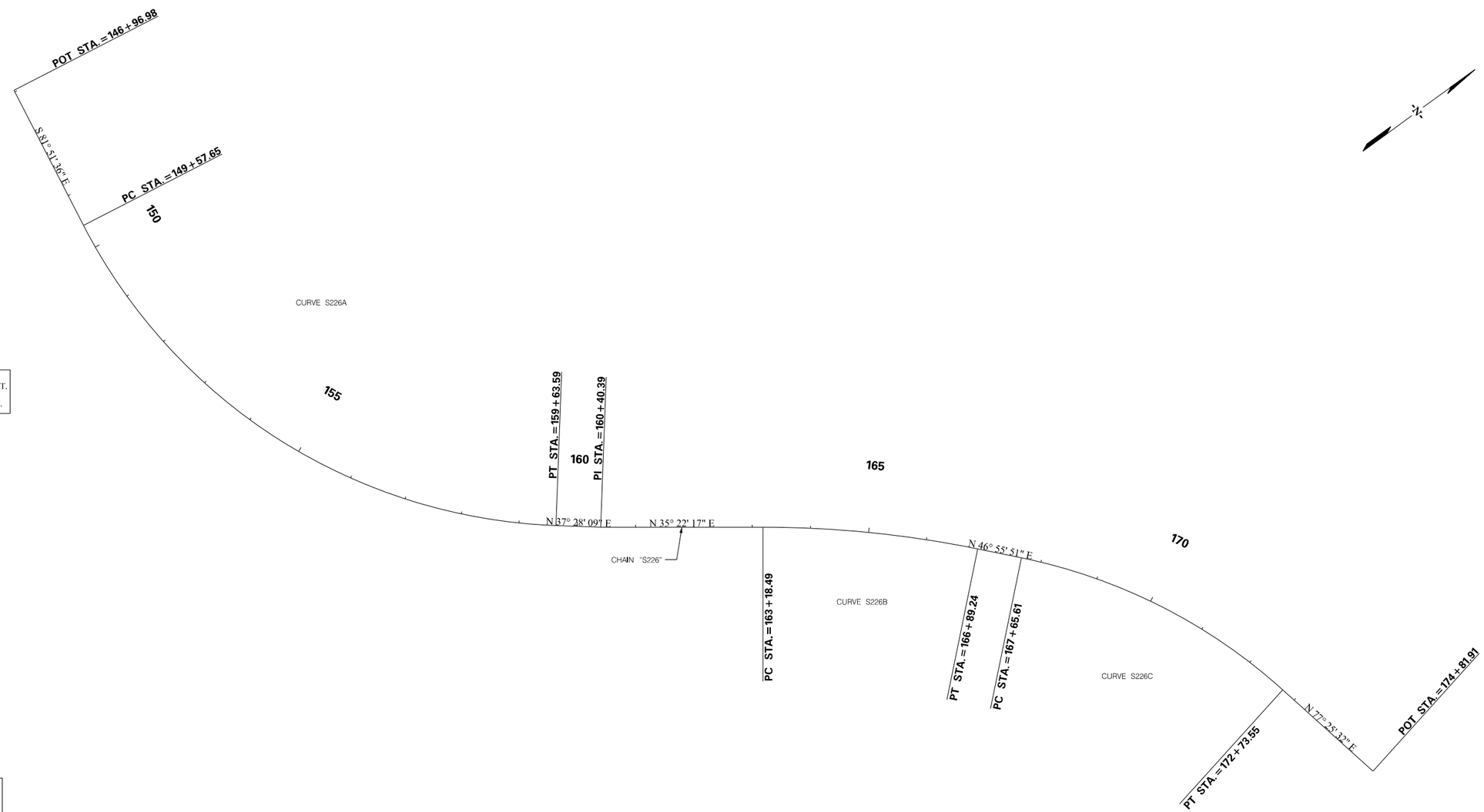

Beginning chain S226 description

Point 7 N 1,129,293.4059 E 1,774,334.6451 Sta 146+96.98

Course from 7 to PC S226A S 81^ 51' 36.47" E Dist 260.6679

Curve Data

Curve S226A
P.I. Station 155+13.56 N 1,129,177.7865 E 1,775,142.9966
Delta = 60^ 40' 14.09" (LT)
Degree = 6^ 01' 52.48"
Tangent = 555.9103
Length = 1,005.9380
Radius = 949.9827
External = 150.7004
Long Chord = 959.5952
Mid. Ord. = 130.0672
P.C. Station 149+57.65 N 1,129,256.4979 E 1,774,592.6869
P.T. Station 159+63.59 N 1,129,619.0011 E 1,775,481.1769
C.C. N 1,130,196.9099 E 1,774,727.1951
Back = S 81^ 51' 36.47" E
Ahead = N 37^ 28' 09.44" E
Chord Bear = N 67^ 48' 16.48" E

DS = RETAIN EXIST.
eMAX = RETAIN EXIST.
e = RETAIN EXIST.
LG% = RETAIN EIXST.

Course from PT S226A to 15 N 37^ 28' 09.44" E Dist 76.8026

Point 15 N 1,129,679.9578 E 1,775,527.8987 Sta 160+40.39

Course from 15 to PC S226B N 35^ 22' 17.37" E Dist 278.1041

Curve Data

Curve S226B
P.I. Station 165+04.50 N 1,130,058.3985 E 1,775,796.5592
Delta = 11^ 33' 33.59" (RT)
Degree = 3^ 07' 04.34"
Tangent = 186.0035
Length = 370.7443
Radius = 1,837.6570
External = 9.3894
Long Chord = 370.1159
Mid. Ord. = 9.3417
P.C. Station 163+18.49 N 1,129,906.7283 E 1,775,688.8863
P.T. Station 166+89.24 N 1,130,185.4167 E 1,775,932.4403
C.C. N 1,128,842.9537 E 1,777,187.3411
Back = N 35^ 22' 17.37" E
Ahead = N 46^ 55' 50.95" E
Chord Bear = N 41^ 09' 04.16" E

DS = 35 MPH
eMAX = 6%
e = 3%
LG-PC = 0.62%
LG-PT = 0.62%

Course from PT S226B to PC S226C N 46^ 55' 50.95" E Dist 76.3737

Curve Data

Curve S226C
P.I. Station 170+25.75 N 1,130,415.2152 E 1,776,178.2732
Delta = 30^ 29' 41.02" (RT)
Degree = 6^ 00' 13.03"
Tangent = 260.1395
Length = 507.9390
Radius = 954.3538
External = 34.8195
Long Chord = 501.9650
Mid. Ord. = 33.5938
P.C. Station 167+65.61 N 1,130,237.5709 E 1,775,988.2335
P.T. Station 172+73.55 N 1,130,471.8497 E 1,776,432.1730
C.C. N 1,129,540.3871 E 1,776,639.9435
Back = N 46^ 55' 50.95" E
Ahead = N 77^ 25' 31.98" E
Chord Bear = N 62^ 10' 41.47" E

DS = RETAIN EXIST.
eMAX = RETAIN EXIST.
e = RETAIN EXIST.
LG% = RETAIN EIXST.

Course from PT S226C to 28 N 77^ 25' 31.98" E Dist 208.3599

Point 28 N 1,130,517.2113 E 1,776,635.5352 Sta 174+81.91

Ending chain S226 description

Z:\Projects\22-6\Bridge Package 14\S-226 over Unnamed Stream\Roadway\PLANS\SHT_5A.dgn
10/20/2022

lane

0 50' 100' 200'
SCALE : 1" = 100'

ALIGNMENT CONTROL CAN BE FOUND ON REFERENCE DATA SHEET

INFRASTRUCTURE CONSULTING & ENGINEERING

PRELIMINARY
NOT FOR CONSTRUCTION

SCALE: 1" = 100'

REV. NO.	BY	DATE	DESCRIPTION OF REVISION
7			
6			
5			
4			
3			
2			
1			

SOUTH CAROLINA DEPARTMENT OF TRANSPORTATION

REFERENCE DATA SHEET

S-226 (HAMMET GROVE ROAD)
OVER UNNAMED STREAM

FED. RD. DIV. NO.	STATE	COUNTY	PROJECT ID	ROAD / ROUTE NO.	SHEET NO.
3	SC	CHEROKEE	1162220	S-226	6

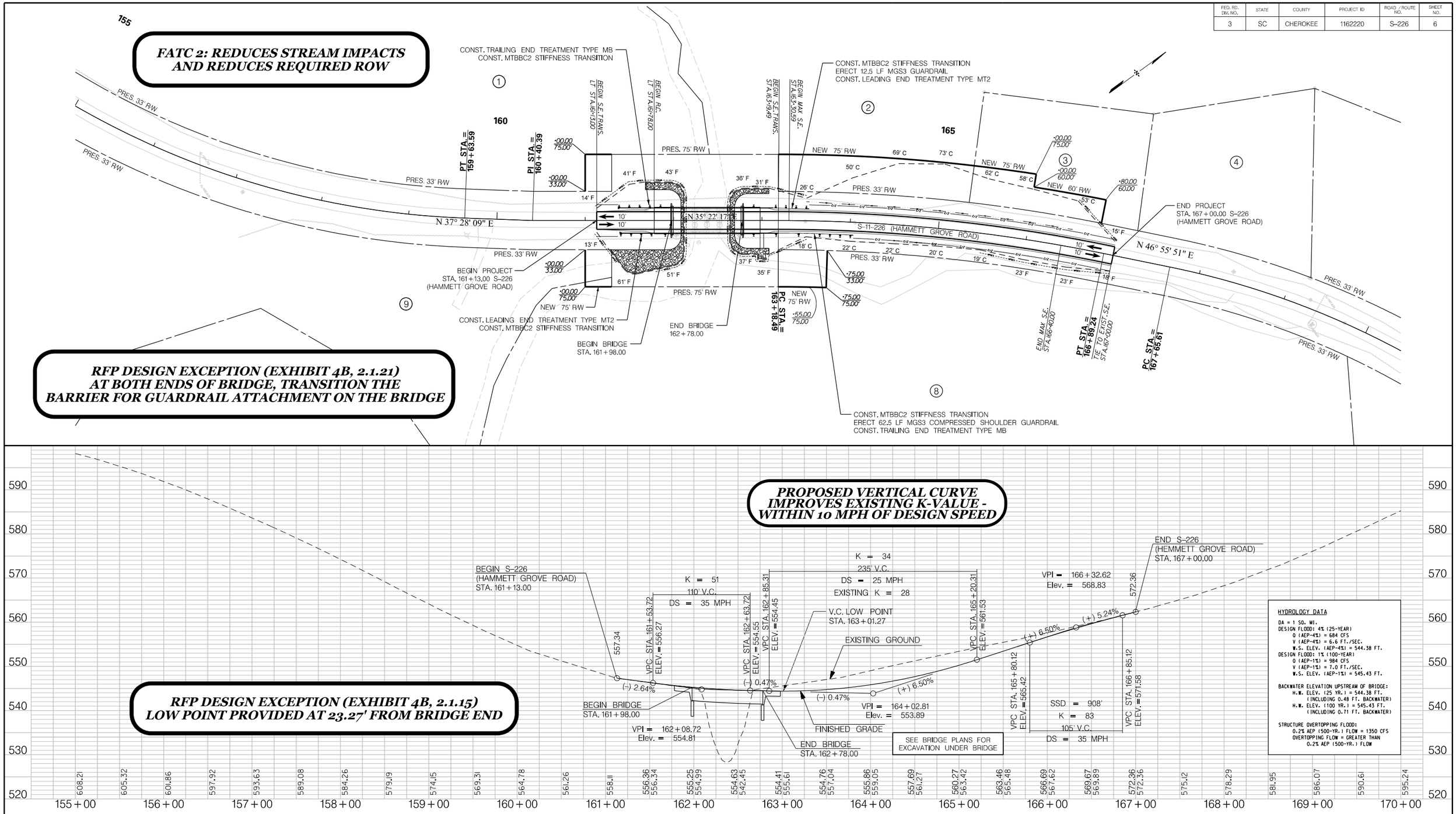

lane

0 25' 50' 100'

SCALE : 1" = 50'

ALIGNMENT CONTROL CAN BE FOUND ON REFERENCE DATA SHEET 5A

INFRASTRUCTURE CONSULTING & ENGINEERING

PRELIMINARY

NOT FOR CONSTRUCTION

HORIZONTAL SCALE: 1" = 50' VERTICAL SCALE: 1" = 10'

REV. NO.	BY	DATE	DESCRIPTION OF REVISION
7			
6			
5			
4			
3			
2			
1			

SOUTH CAROLINA DEPARTMENT OF TRANSPORTATION

PLAN AND PROFILE SHEET

S-226 (HAMMET GROVE ROAD) OVER UNNAMED STREAM

Z:\Projects\22-61\Bridge Package 14\S-226 over Unnamed Stream\Roadway\PLANS\SHT_06.dgn
10/20/2022

FED. RD. DIV. NO.	STATE	COUNTY	PROJECT ID	ROAD / ROUTE NO.	SHEET NO.
3	SC	CHEROKEE	1162220	S-226	X1

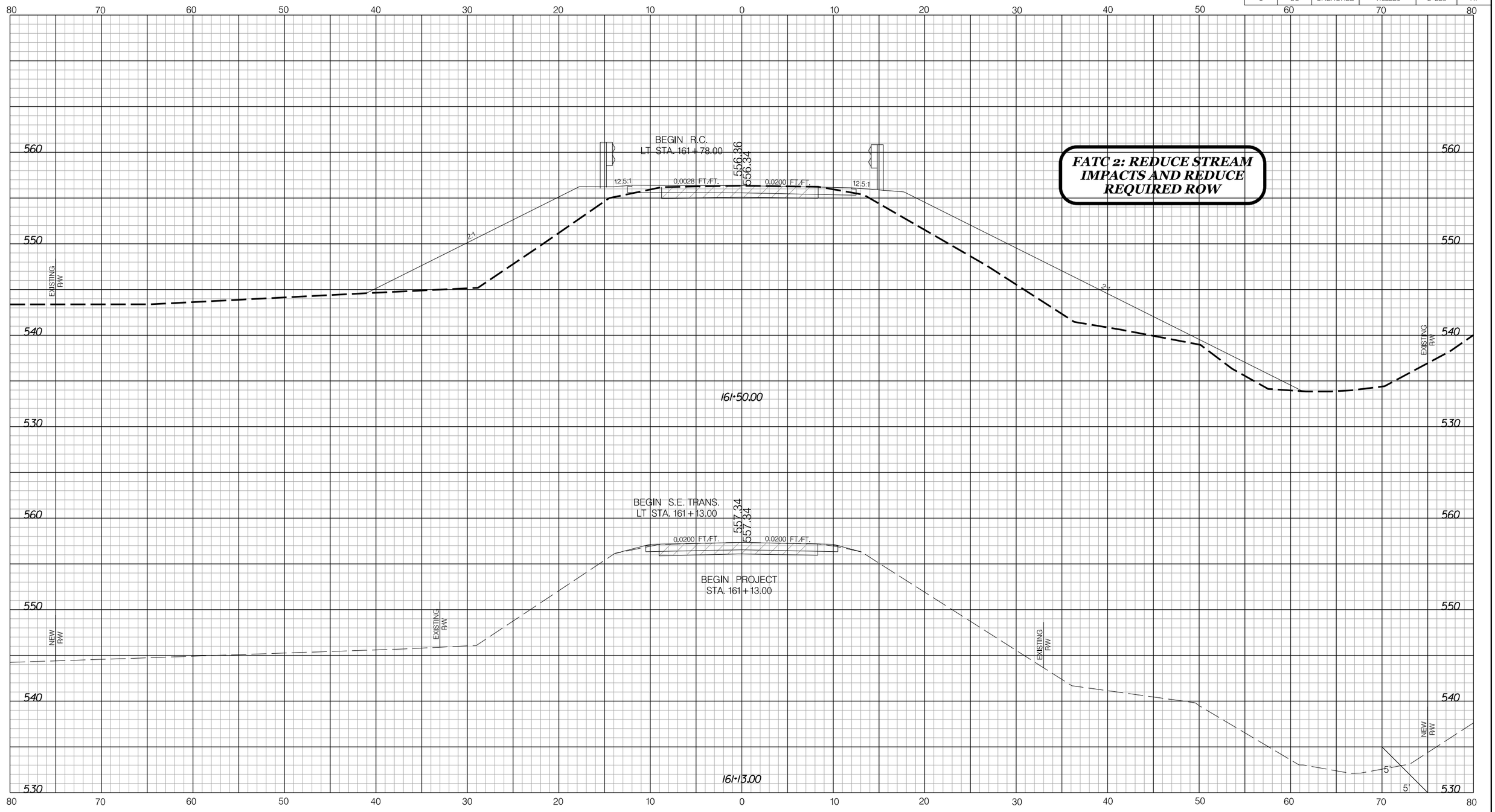

lane INFRASTRUCTURE CONSULTING & ENGINEERING

PRELIMINARY
NOT FOR CONSTRUCTION

REV. NO.	BY	DATE	DESCRIPTION OF REVISION
4			
3			
2			
1			
0			

SOUTH CAROLINA DEPARTMENT OF TRANSPORTATION

CROSS SECTION SHEET

S-226 (HAMMET GROVE ROAD) OVER UNNAMED STREAM

Z:\Projects\22-61Bridge Package 14\S-226 over Unnamed Stream\Roadway\DGN\CROSS SECTIONS\S226_XS_SHEETS.dgn
10/20/2022

FED. RD. DIV. NO.	STATE	COUNTY	PROJECT ID	ROAD / ROUTE NO.	SHEET NO.
3	SC	CHEROKEE	1162220	S-226	X2

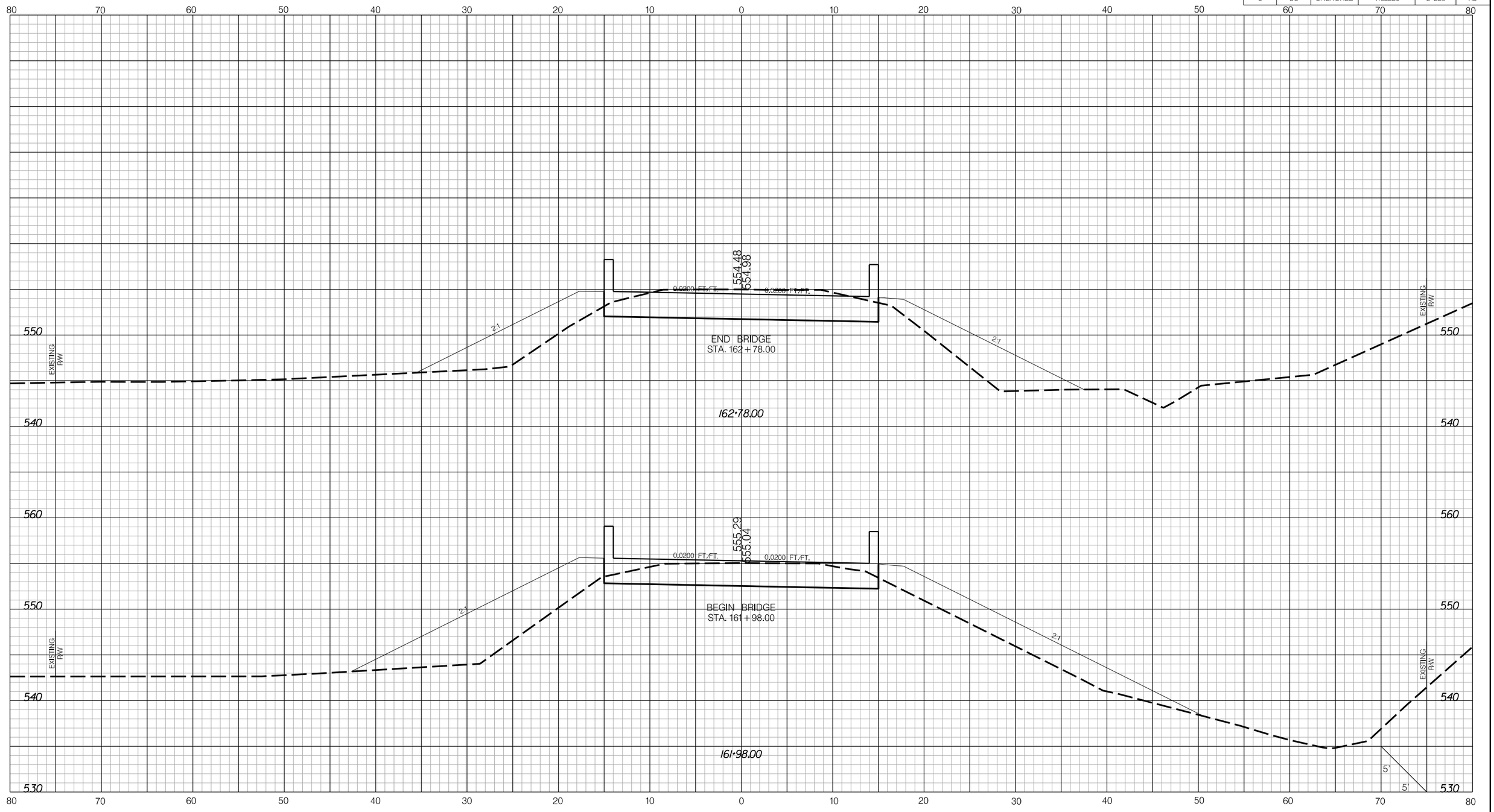

lane INFRASTRUCTURE CONSULTING & ENGINEERING

PRELIMINARY
NOT FOR CONSTRUCTION

REV. NO.	BY	DATE	DESCRIPTION OF REVISION
4			
3			
2			
1			
0			

SOUTH CAROLINA DEPARTMENT OF TRANSPORTATION

CROSS SECTION SHEET

S-226 (HAMMET GROVE ROAD)
OVER UNNAMED STREAM

Z:\Projects\22-61Bridge Package 14\S-226 over Unnamed Stream\Roadway\DGN\CROSS SECTIONS\S226_XS_SHEETS.dgn
10/20/2022

FED. RD. DIV. NO.	STATE	COUNTY	PROJECT ID	ROAD / ROUTE NO.	SHEET NO.
3	SC	CHEROKEE	1162220	S-226	X3

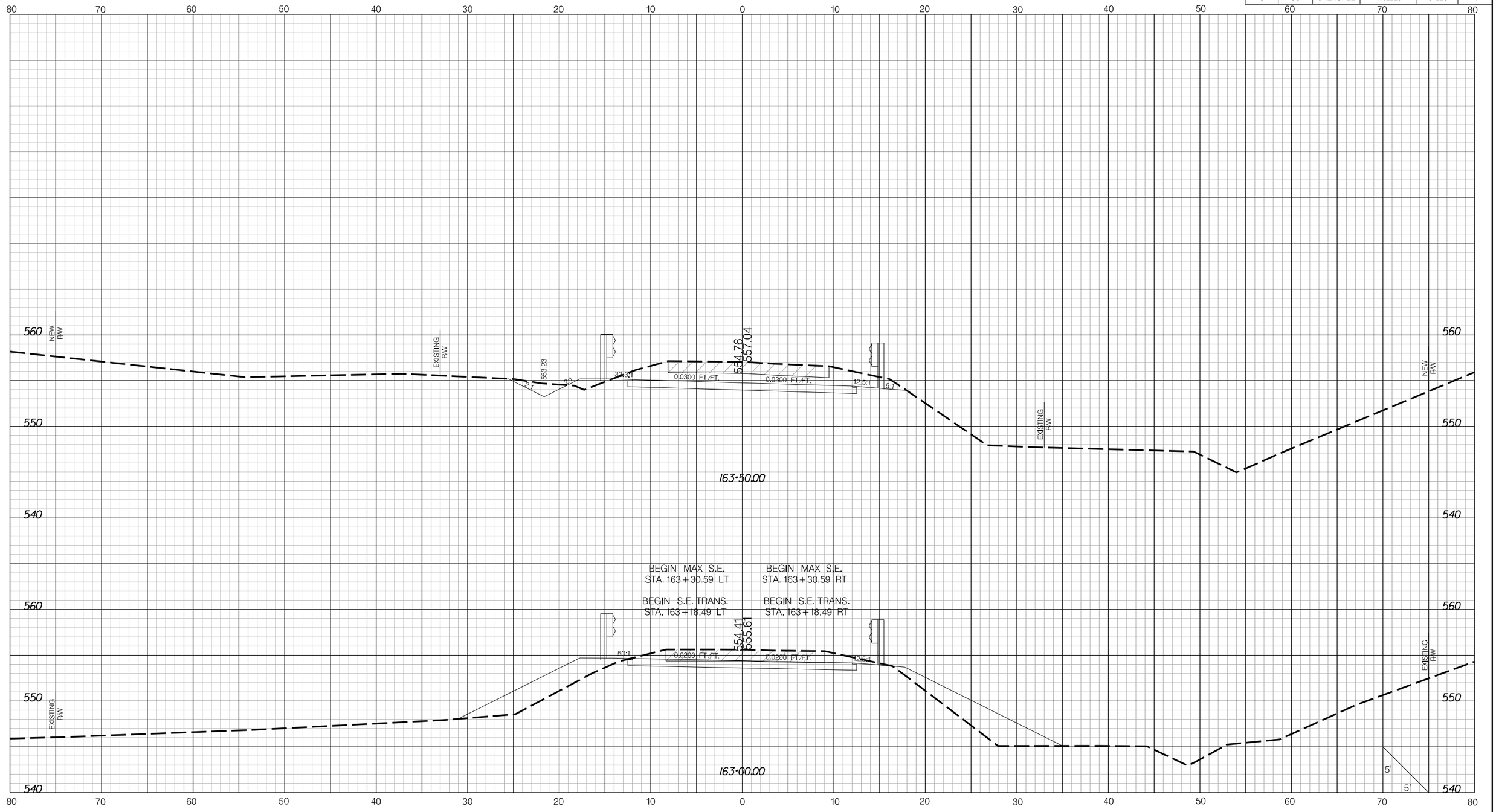

lane INFRASTRUCTURE CONSULTING & ENGINEERING

PRELIMINARY
NOT FOR CONSTRUCTION

REV. NO.	BY	DATE	DESCRIPTION OF REVISION
4			
3			
2			
1			
0			

SOUTH CAROLINA DEPARTMENT OF TRANSPORTATION

CROSS SECTION SHEET

S-226 (HAMMET GROVE ROAD)
OVER UNNAMED STREAM

Z:\Projects\22-61Bridge Package 14\S-226 over Unnamed Stream\Roadway\DGN\CROSS SECTIONS\S226_XS_SHEETS.dgn
10/20/2022

FED. RD. DIV. NO.	STATE	COUNTY	PROJECT ID	ROAD / ROUTE NO.	SHEET NO.
3	SC	CHEROKEE	1162220	S-226	X4

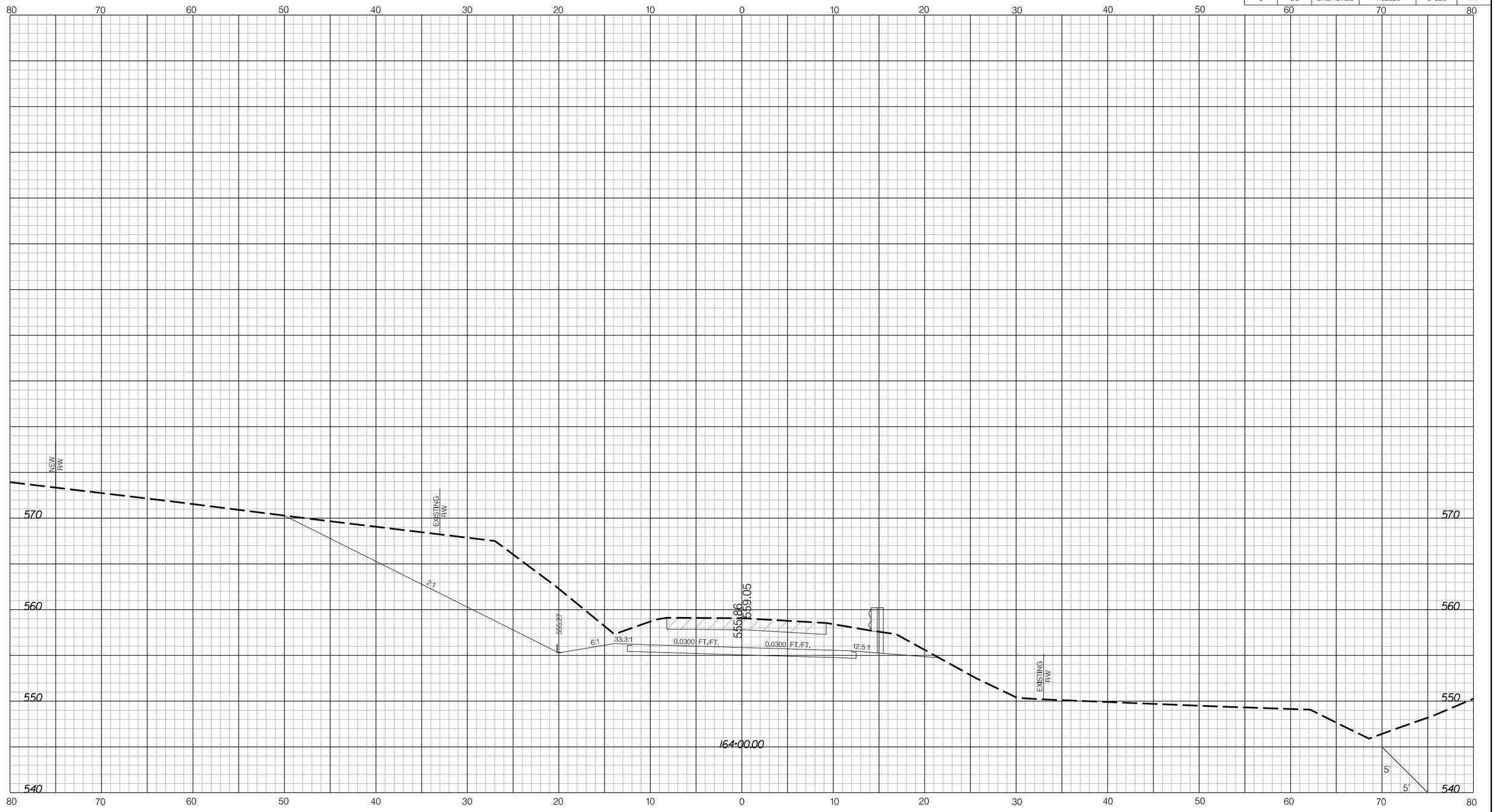

Z:\Projects\22-6\Bridge Package 14\S-226 over Unnamed Stream\Roadway\DGN\CROSS SECTIONS\S226_XS_SHEETS.dgn
10/20/2022

lane INFRASTRUCTURE CONSULTING & ENGINEERING

PRELIMINARY
NOT FOR CONSTRUCTION

REV. NO.	BY	DATE	DESCRIPTION OF REVISION
4			
3			
2			
1			
0			

SOUTH CAROLINA DEPARTMENT OF TRANSPORTATION

CROSS SECTION SHEET

S-226 (HAMMET GROVE ROAD)
OVER UNNAMED STREAM

FED. RD. DIV. NO.	STATE	COUNTY	PROJECT ID	ROAD / ROUTE NO.	SHEET NO.
3	SC	CHEROKEE	1162220	S-226	X5

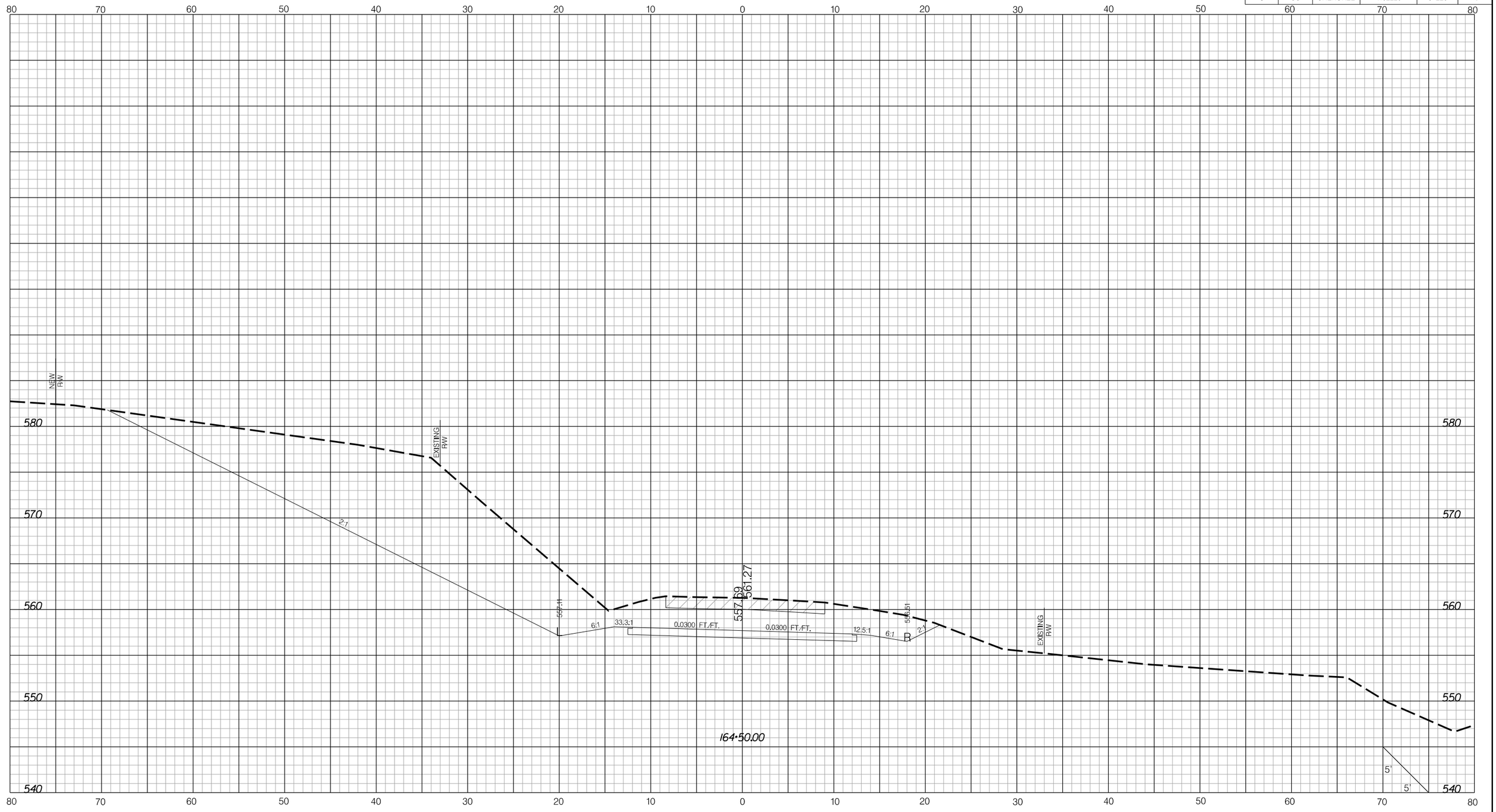

lane INFRASTRUCTURE CONSULTING & ENGINEERING

PRELIMINARY
NOT FOR CONSTRUCTION

REV. NO.	BY	DATE	DESCRIPTION OF REVISION
4			
3			
2			
1			
0			

SOUTH CAROLINA DEPARTMENT OF TRANSPORTATION

CROSS SECTION SHEET

S-226 (HAMMET GROVE ROAD)
OVER UNNAMED STREAM

Z:\Projects\22-6\Bridge Package 14\S-226 over Unnamed Stream\Roadway\DGN\CROSS SECTIONS\S226_XS_SHEETS.dgn
10/20/2022

FED. RD. DIV. NO.	STATE	COUNTY	PROJECT ID	ROAD / ROUTE NO.	SHEET NO.
3	SC	CHEROKEE	1162220	S-226	X6

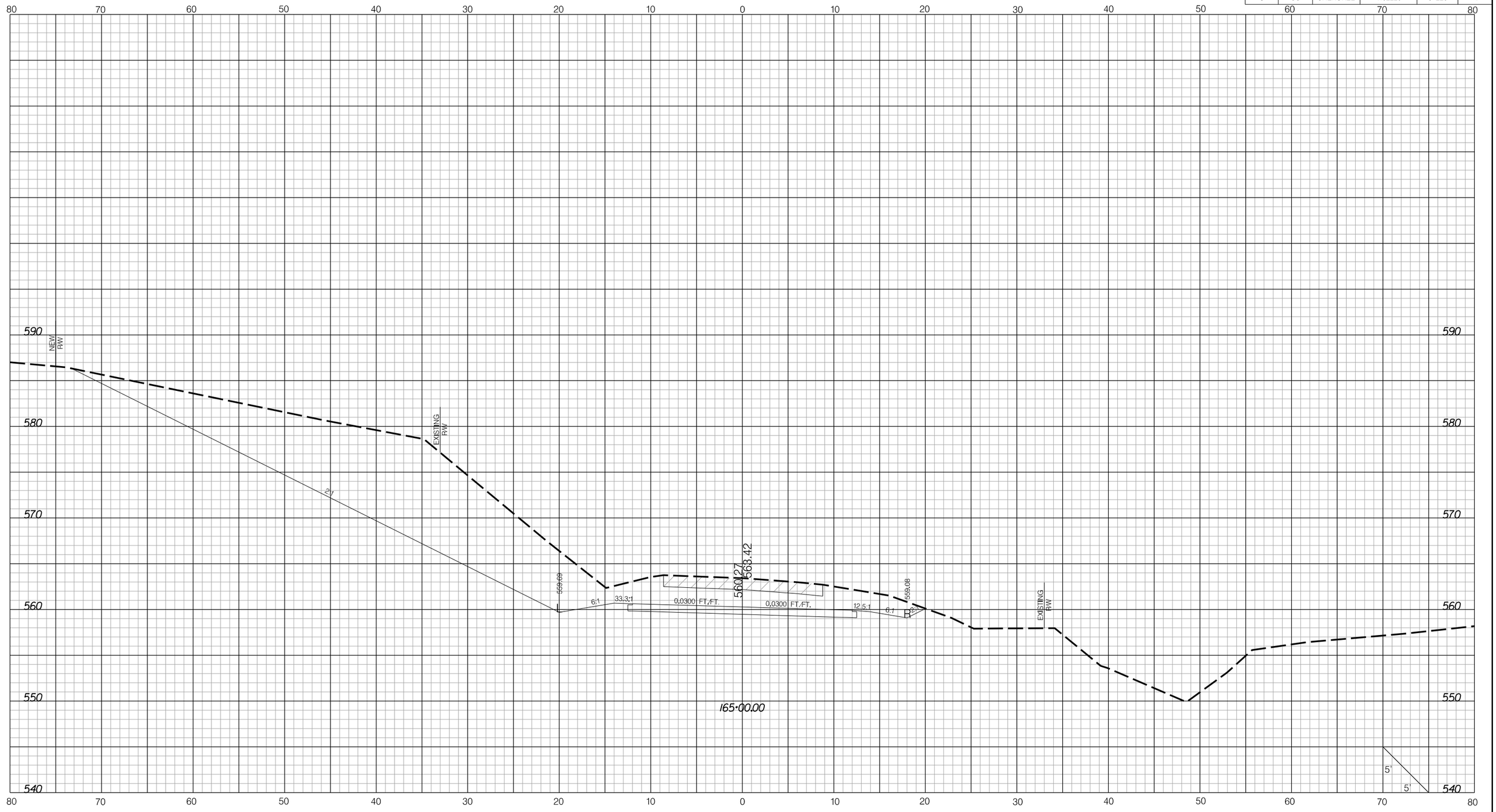

lane INFRASTRUCTURE CONSULTING & ENGINEERING

PRELIMINARY
NOT FOR CONSTRUCTION

REV. NO.	BY	DATE	DESCRIPTION OF REVISION
4			
3			
2			
1			
0			

SOUTH CAROLINA DEPARTMENT OF TRANSPORTATION

CROSS SECTION SHEET

S-226 (HAMMET GROVE ROAD)
OVER UNNAMED STREAM

Z:\Projects\22-6\Bridge Package 14\S-226 over Unnamed Stream\Roadway\DGN\CROSS SECTIONS\S226_XS_SHEETS.dgn
10/20/2022

FED. RD. DIV. NO.	STATE	COUNTY	PROJECT ID	ROAD / ROUTE NO.	SHEET NO.
3	SC	CHEROKEE	1162220	S-226	X7

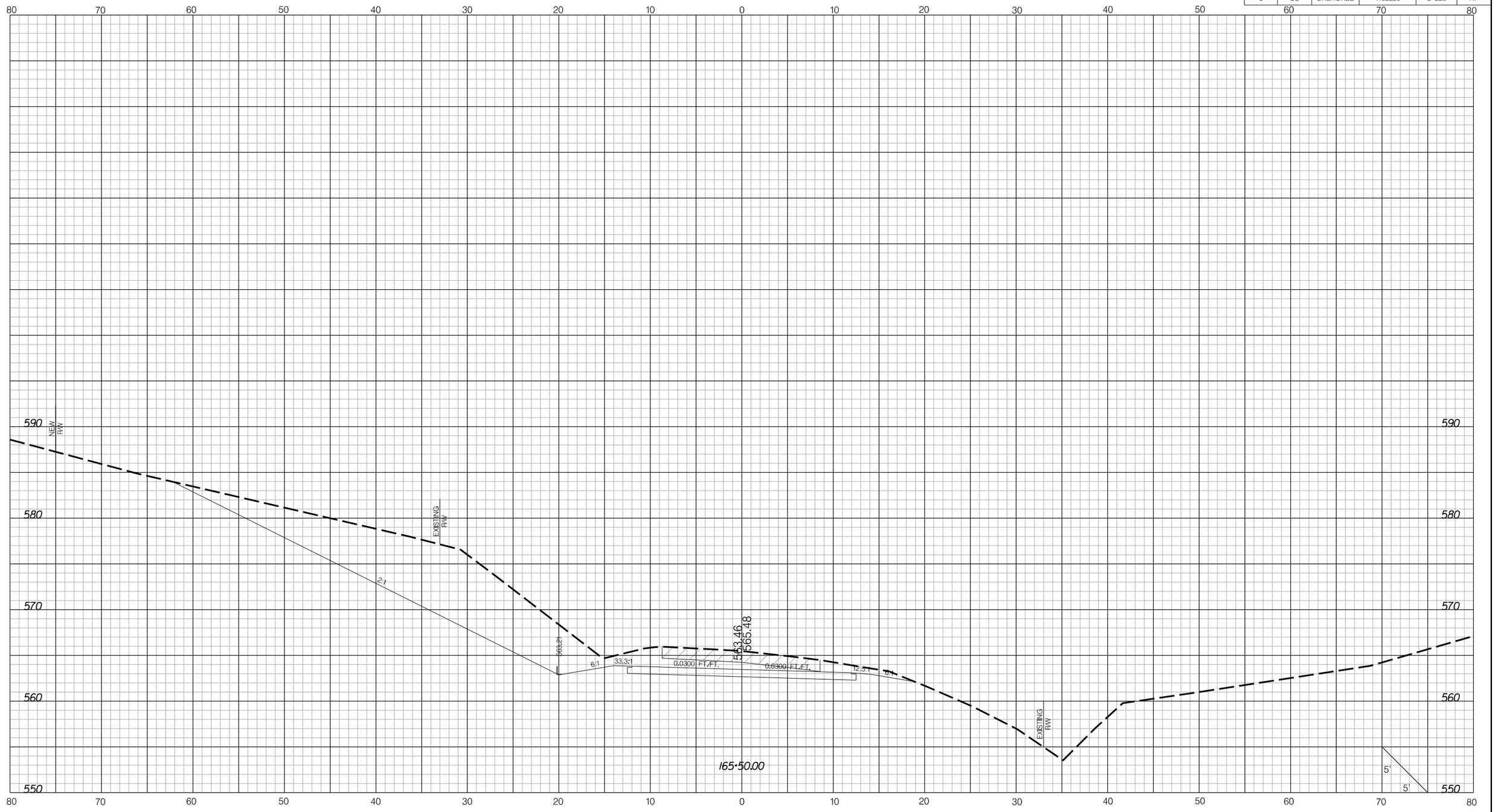

Z:\Projects\22-6\Bridge Package 14\S-226 over Unnamed Stream\Roadway\DGN\CROSS SECTIONS\S226_XS_SHEETS.dgn
10/20/2022

lane INFRASTRUCTURE CONSULTING & ENGINEERING

PRELIMINARY
NOT FOR CONSTRUCTION

REV. NO.	BY	DATE	DESCRIPTION OF REVISION
4			
3			
2			
1			
0			

SOUTH CAROLINA DEPARTMENT OF TRANSPORTATION

CROSS SECTION SHEET

S-226 (HAMMET GROVE ROAD)
OVER UNNAMED STREAM

FED. RD. DIV. NO.	STATE	COUNTY	PROJECT ID	ROAD / ROUTE NO.	SHEET NO.
3	SC	CHEROKEE	1162220	S-226	X8

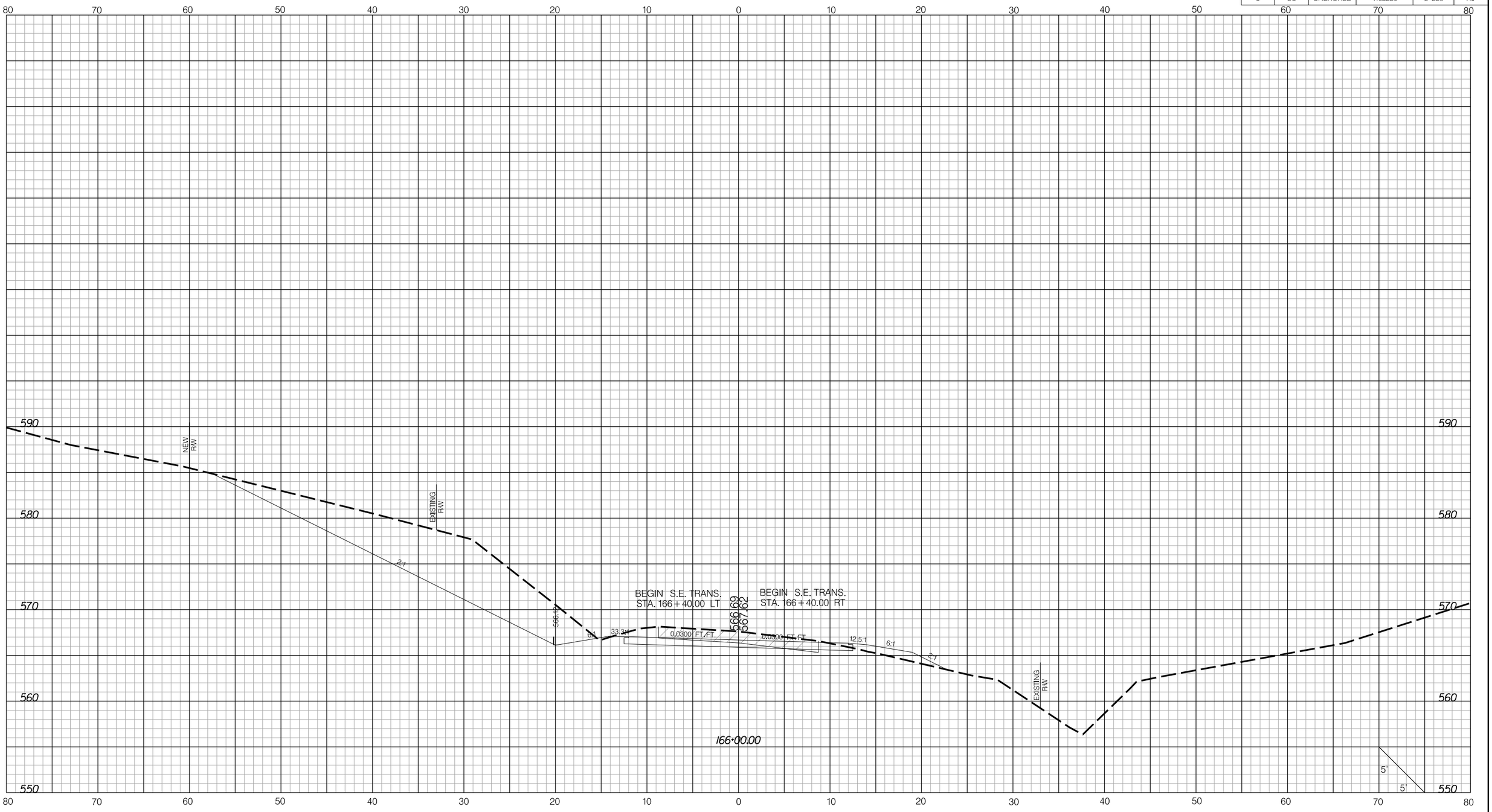

Z:\Projects\22-6\Bridge Package 14\S-226 over Unnamed Stream\Roadway\DGN\CROSS SECTIONS\S226_XS_SHEETS.dgn
10/20/2022

lane INFRASTRUCTURE CONSULTING & ENGINEERING

PRELIMINARY
NOT FOR CONSTRUCTION

REV. NO.	BY	DATE	DESCRIPTION OF REVISION
4			
3			
2			
1			
0			

SOUTH CAROLINA DEPARTMENT OF TRANSPORTATION

CROSS SECTION SHEET

S-226 (HAMMET GROVE ROAD)
OVER UNNAMED STREAM

FED. RD. DIV. NO.	STATE	COUNTY	PROJECT ID	ROAD / ROUTE NO.	SHEET NO.
3	SC	CHEROKEE	1162220	S-226	X9

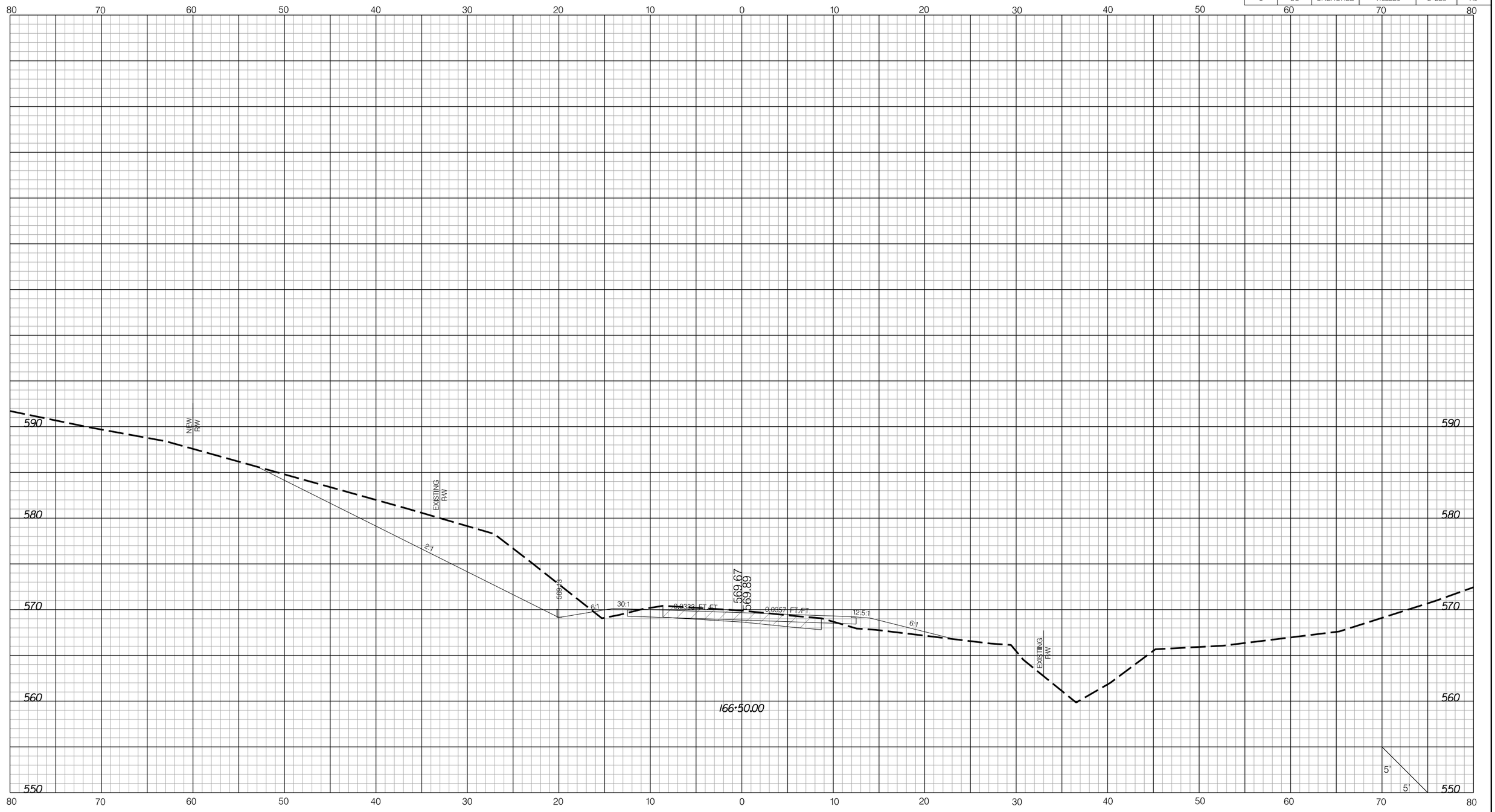

Z:\Projects\22-6\Bridge Package 14\S-226 over Unnamed Stream\Roadway\DGN\CROSS SECTIONS\S226_XS_SHEETS.dgn
10/20/2022

lane INFRASTRUCTURE CONSULTING & ENGINEERING

PRELIMINARY
NOT FOR CONSTRUCTION

REV. NO.	BY	DATE	DESCRIPTION OF REVISION
4			
3			
2			
1			
0			

SOUTH CAROLINA DEPARTMENT OF TRANSPORTATION

CROSS SECTION SHEET

S-226 (HAMMET GROVE ROAD)
OVER UNNAMED STREAM

FED. RD. DIV. NO.	STATE	COUNTY	PROJECT ID	ROAD / ROUTE NO.	SHEET NO.
3	SC	CHEROKEE	1162220	S-226	X10

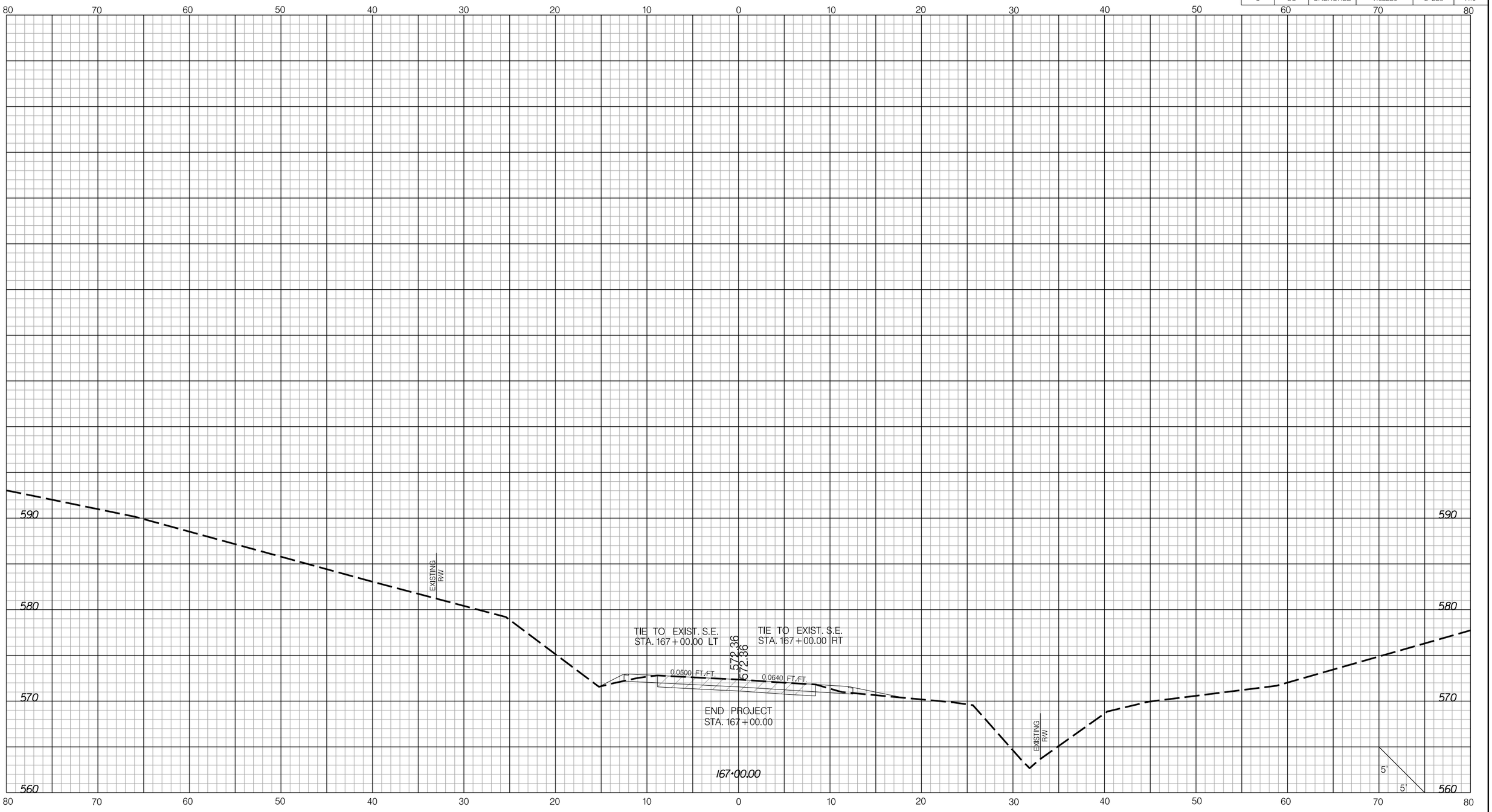

lane INFRASTRUCTURE CONSULTING & ENGINEERING

PRELIMINARY
NOT FOR CONSTRUCTION

REV. NO.	BY	DATE	DESCRIPTION OF REVISION
4			
3			
2			
1			
0			

SOUTH CAROLINA DEPARTMENT OF TRANSPORTATION

CROSS SECTION SHEET

S-226 (HAMMET GROVE ROAD)
OVER UNNAMED STREAM

Z:\Projects\22-61Bridge Package 14\S-226 over Unnamed Stream\Roadway\DGN\CROSS SECTIONS\S226_XS_SHEETS.dgn
10/20/2022

SHEET NO.	TOTAL SHEETS
1	5

INDEX OF SHEETS

SHEET NO.	DESCRIPTION	SHEET
1	TITLE SHEET	1
1A	RIGHT-OF-WAY TITLE SHEET	OMITTED
2	SUMMARY OF ESTIMATED QUANTITIES	OMITTED
3	TYPICAL SECTIONS	1
4	RIGHT-OF-WAY DATA SHEET	OMITTED
4A	PROPERTY STRIP MAP	OMITTED
5	GENERAL CONSTRUCTION NOTE	OMITTED
5A	REFERENCE DATA SHEET	1
6-6A	PLAN AND PROFILE SHEET	2
TC1	TRAFFIC CONTROL SHEET	OMITTED
PM1	PAVEMENT MARKING AND SIGNING SHEET	OMITTED
EC1 – EC2	EROSION CONTROL SHEETS	OMITTED
U1	UTILITY SHEET	OMITTED
X1 – X10	CROSS SECTIONS	OMITTED
		5

SCDOT
South Carolina Department of Transportation

PROPOSED PLANS FOR

CHEROKEE COUNTY

PROJECT ID: 1162220

S-86 (ROCK HOUSE ROAD)

ROADWAY APPROACHES TO BRIDGE OVER KINGS CREEK

BRIDGE PLANS BOUND UNDER A SEPARATE COVER

Design Reference for these plans is the:
2021
SCDOT "Roadway Design Manual"

Hydraulic Design Reference for these plans is the:
2009
Edition of SCDOT's "Requirements for Hydraulic Design Studies"

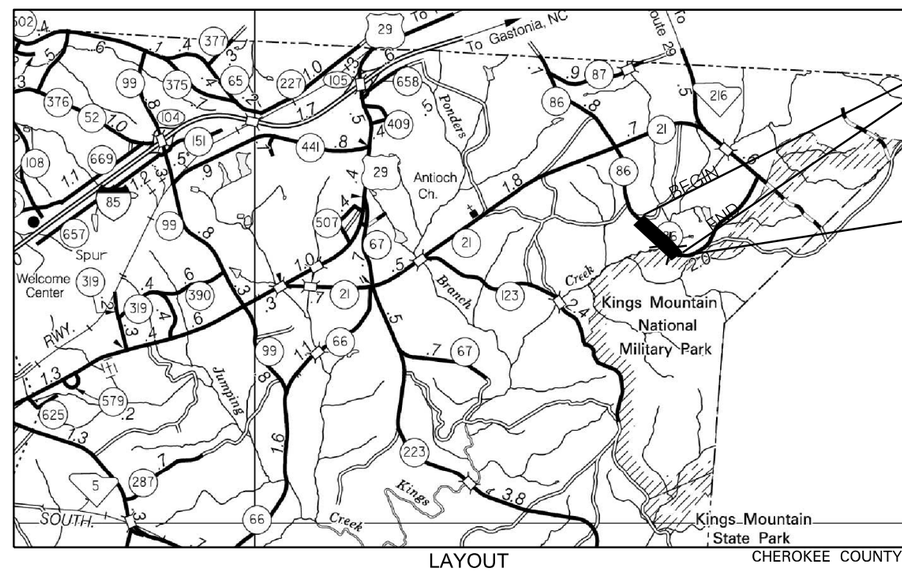

LAYOUT
NOT TO SCALE

CHEROKEE COUNTY

PROJECT: 1162220 S-86
(ROCK HOUSE ROAD)
STA. 47+50.00 TO STA. 55+25.00
SEE SHEETS 6-6A

CONSTRUCT 160.00' PRESTRESSED CONCRETE BOX BEAM BRIDGE
STA. 49+06.20 TO STA. 50+66.20
(SEE BRIDGE PLANS)

N

3 DAYS BEFORE DIGGING IN SOUTH CAROLINA
CALL 811
SOUTH CAROLINA 811 (SC811)
WWW.SC811.COM
ALL UTILITIES MAY NOT BE A MEMBER OF SC811

RAILROAD INVOLVEMENT?
YES / (NO)

TRAFFIC DATA

2020	ADT	200	
2040	ADT	256	
TRUCKS		5	%

NET LENGTH OF ROADWAY	0.117	MILES
NET LENGTH OF BRIDGES	0.030	MILES
NET LENGTH OF PROJECT	0.147	MILES
LENGTH OF EXCEPTIONS	0.000	MILES
GROSS LENGTH OF PROJECT	0.147	MILES

NOTE: EXCEPT AS MAY BE OTHERWISE SPECIFIED ON THE PLANS OR IN THE SPECIAL PROVISIONS, ALL MATERIALS AND WORKMANSHIP ON THIS PROJECT SHALL CONFORM TO THE SOUTH CAROLINA DEPARTMENT OF TRANSPORTATION STANDARD SPECIFICATIONS FOR HIGHWAY CONSTRUCTION (2007 EDITION) AND THE STANDARD DRAWINGS FOR ROAD CONSTRUCTION IN EFFECT AT THE TIME OF FINAL RFP.

lane

INFRASTRUCTURE CONSULTING & ENGINEERING

PRELIMINARY
NOT FOR CONSTRUCTION

FOR CONSTRUCTION : _____ DATE _____

$$user$$
ridge Package 14\S-86 over Kings Creek\Roadway\PLANS\SHT_01.dgn
10/19/2022

std. form13.dgn

FED. RD. DIV. NO.	STATE	COUNTY	PROJECT ID	ROAD / ROUTE NO.	SHEET NO.
3	SC	CHEROKEE	1162220	S-86	3

■ VARIABLE – SEE PLANS & CROSS SECTIONS

* ADD 3.75' WHERE GUARDRAIL IS ERECTED EXCEPT IN AREAS OF COMPRESSED SHOULDER GUARDRAIL

PROVIDE NON-MOW STRIP FOR GUARDRAIL IN ACCORDANCE WITH STD. DWG. 805-525-01

⌀ 6' MIN WHEN USING 6:1 SLOPES
8' MIN WHEN USING 4:1 SLOPES

1

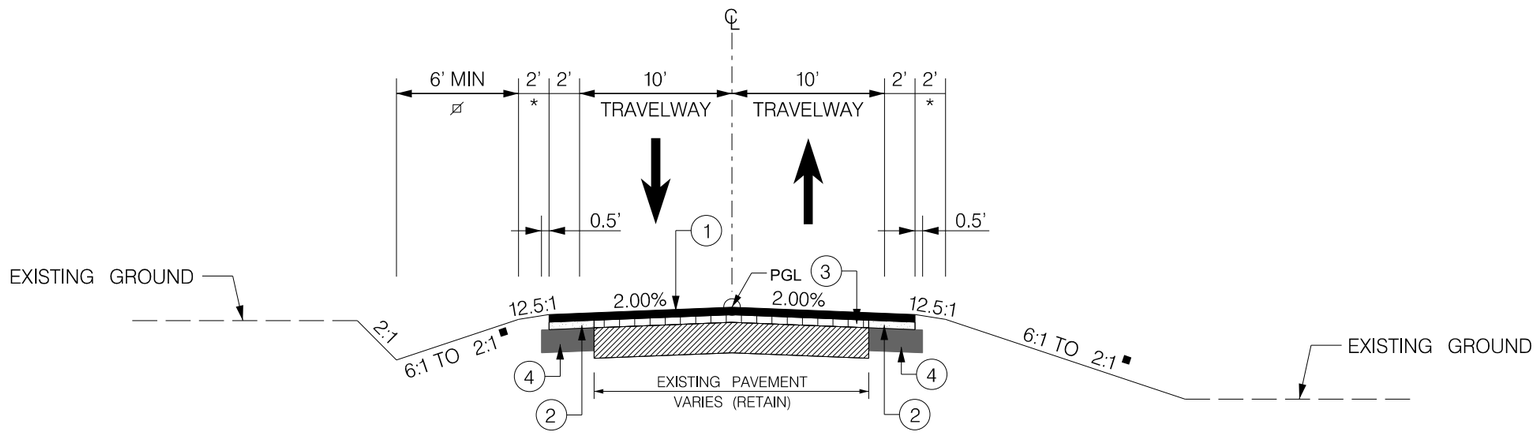

USE THIS SECTION
S-86 (ROCK HOUSE ROAD)
STA. 50+86.20 TO +/- STA. 51+30.00
+/- STA. 53+11.00 TO STA. 55+25.00

2

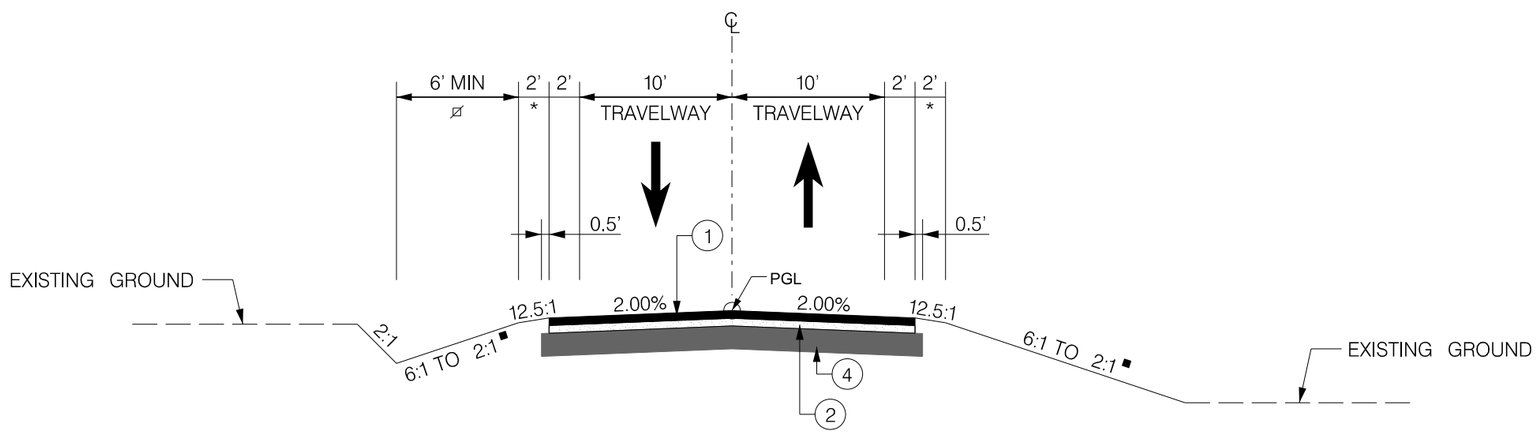

USE THIS SECTION
S-86 (ROCK HOUSE ROAD)
STA. 47+50.00 TO STA. 48+86.20
+/- STA. 51+30.00 TO +/- STA. 53+11.00

①	HOT MIX ASPHALT SURFACE COURSE	
②	HOT MIX ASPHALT INTERMEDIATE COURSE	
③	VARIABLE HOT MIX ASPHALT FOR BUILDUP	
④	HOT MIX ASPHALT BASE COURSE OR GABC	

SEE RFP EXHIBIT 4C FOR PAVEMENT STRUCTURE

lane

INFRASTRUCTURE CONSULTING & ENGINEERING

FUNCTIONAL CLASSIFICATION

RURAL LOCAL GROUP 4

RTE. S-86	DESIGN SPEED	
MPH	FROM STA.	TO STA.
50	47+50.00	55+25.00
EXCEPTIONS TO DESIGN SPEED		

PRELIMINARY
NOT FOR CONSTRUCTION

N.T.S.

REV. NO.	BY	DATE	DESCRIPTION OF REVISION
7			
6			
5			
4			
3			
2			
1			

SOUTH CAROLINA DEPARTMENT OF TRANSPORTATION

TYPICAL SECTION

S-86 (ROCK HOUSE ROAD)
OVER KINGS CREEK

Z:\Projects\22-6\Bridge Package 14\S-86 over Kings Creek\Roadway\PLANS\SHT_03.dgn
10/19/2022

FED. RD. DIV. NO.	STATE	COUNTY	PROJECT ID	ROAD / ROUTE NO.	SHEET NO.
3	SC	CHEROKEE	1162220	S-86	5A

EXISTING DATA

Beginning chain S86A description

Point 5000 N 1,206,531.7956 E 1,876,459.9730 Sta 34+00.54

Course from 5000 to 5001 S 47° 33' 13.86" E Dist 904.4406

Point 5001 N 1,205,921.3914 E 1,877,127.3705 Sta 43+04.98

Course from 5001 to PC S86A-1 S 47° 16' 36.18" E Dist 930.9487

Curve Data

Curve S86A-1
P.I. Station 53+80.63 N 1,205,191.6094 E 1,877,917.5831
Delta = 18° 58' 35.23" (LT)
Degree = 6° 37' 04.18"
Tangent = 144.6989
Length = 286.7475
Radius = 865.7793
External = 12.0086
Long Chord = 285.4387
Mid. Ord. = 11.8443
P.C. Station 52+35.93 N 1,205,289.7816 E 1,877,811.2817
P.T. Station 55+22.68 N 1,205,133.3397 E 1,878,050.0309
C.C. N 1,205,925.8168 E 1,878,398.6768
Back = S 47° 16' 36.18" E
Ahead = S 66° 15' 11.41" E
Chord Bear = S 56° 45' 53.79" E

DS = N/A
eMAX = N/A
e = N/A
LG% = N/A

Curve Data

Curve S86A-2
P.I. Station 59+46.59 N 1,204,962.6333 E 1,878,438.0491
Delta = 54° 47' 56.11" (LT)
Degree = 7° 00' 21.23"
Tangent = 423.9090
Length = 782.1828
Radius = 817.8222
External = 103.3358
Long Chord = 752.7095
Mid. Ord. = 91.7435
P.C. Station 55+22.68 N 1,205,133.3397 E 1,878,050.0309
P.T. Station 63+04.86 N 1,205,181.2928 E 1,878,801.2114
C.C. N 1,205,881.9200 E 1,878,379.3647
Back = S 66° 15' 11.41" E
Ahead = N 58° 56' 52.48" E
Chord Bear = N 86° 20' 50.54" E

DS = RETAIN EXIST.
eMAX = RETAIN EXIST.
e = RETAIN EXIST.
LG% = RETAIN EXIST.

Course from PT S86A-2 to 5002 N 58° 56' 52.48" E Dist 238.0284

Point 5002 N 1,205,304.0719 E 1,879,005.1300 Sta 65+42.89

Ending chain S86A description

PROPOSED DATA

Beginning chain PR_S86 description

Curve Data

Curve PR_S86-1
P.I. Station 48+28.70 N 1,205,566.0669 E 1,877,512.1181
Delta = 0° 45' 01.73" (LT)
Degree = 0° 41' 55.42"
Tangent = 53.7039
Length = 107.4064
Radius = 8,200.0000
External = 0.1759
Long Chord = 107.4056
Mid. Ord. = 0.1759
P.C. Station 47+75.00 N 1,205,602.5028 E 1,877,472.6651
P.T. Station 48+82.41 N 1,205,530.1509 E 1,877,552.0450
C.C. N 1,211,626.5422 E 1,883,036.0228
Back = S 47° 16' 36.18" E
Ahead = S 48° 01' 37.91" E
Chord Bear = S 47° 39' 07.04" E

DS = 50 MPH
eMAX = 8%
e = N.C.
LG% = 0.50%

Course from PT PR_S86-1 to PC PR_S86-2 S 48° 01' 37.91" E Dist 398.5386

Curve Data

Curve PR_S86-2
P.I. Station 54+02.54 N 1,205,182.2952 E 1,877,938.7468
Delta = 18° 13' 38.64" (LT)
Degree = 7° 33' 31.72"
Tangent = 121.5978
Length = 241.1411
Radius = 758.0000
External = 9.6914
Long Chord = 240.1256
Mid. Ord. = 9.5690
P.C. Station 52+80.94 N 1,205,263.6172 E 1,877,848.3434
P.T. Station 55+22.09 N 1,205,133.3310 E 1,878,050.0506
C.C. N 1,205,827.1616 E 1,878,355.2770
Back = S 48° 01' 37.91" E
Ahead = S 66° 15' 11.55" E
Chord Bear = S 57° 08' 27.23" E

DS = 50 MPH
eMAX = 8%
e = 8%
LG-PC = 0.50%
LG-PT = 0.50%

Ending chain PR_S86 description

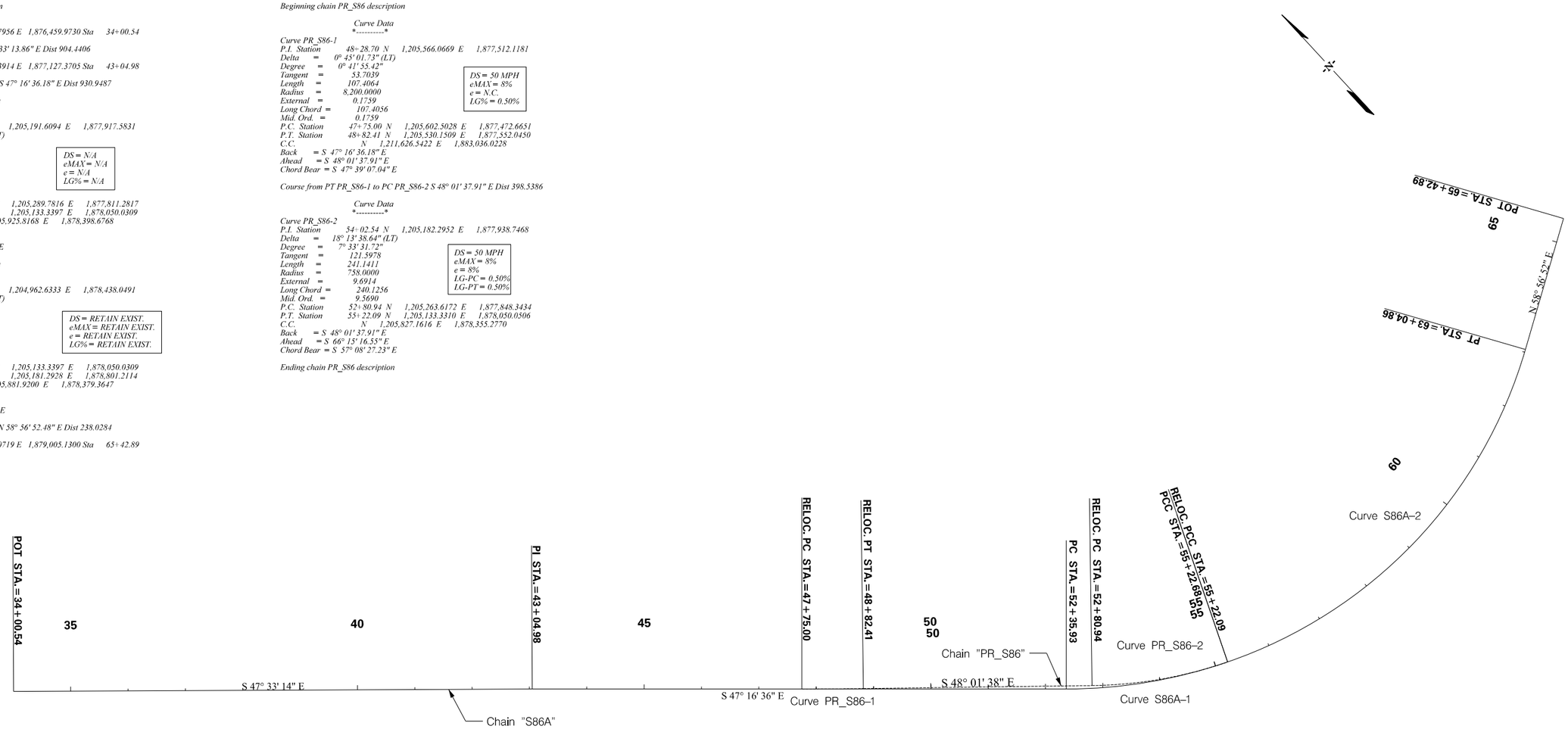

Z:\Projects\22-6\Bridge Package 14\S-86 over Kings Creek\Roadway\PLANS\SHT_05A.dgn
10/19/2022

lane

0 50' 100' 200'
SCALE : 1" = 100'

INFRASTRUCTURE CONSULTING & ENGINEERING

PRELIMINARY
NOT FOR CONSTRUCTION

SCALE: 1" = 100'

REV. NO.	BY	DATE	DESCRIPTION OF REVISION
7			
6			
5			
4			
3			
2			
1			

SOUTH CAROLINA DEPARTMENT OF TRANSPORTATION

REFERENCE DATA SHEET

S-86 (ROCK HOUSE ROAD)
OVER KINGS CREEK

FED. RD. DIV. NO.	STATE	COUNTY	PROJECT ID	ROAD / ROUTE NO.	SHEET NO.
3	SC	CHEROKEE	1162220	S-86	6

FATC 1 - TWO SPAN BRIDGE WITH NO SKEW

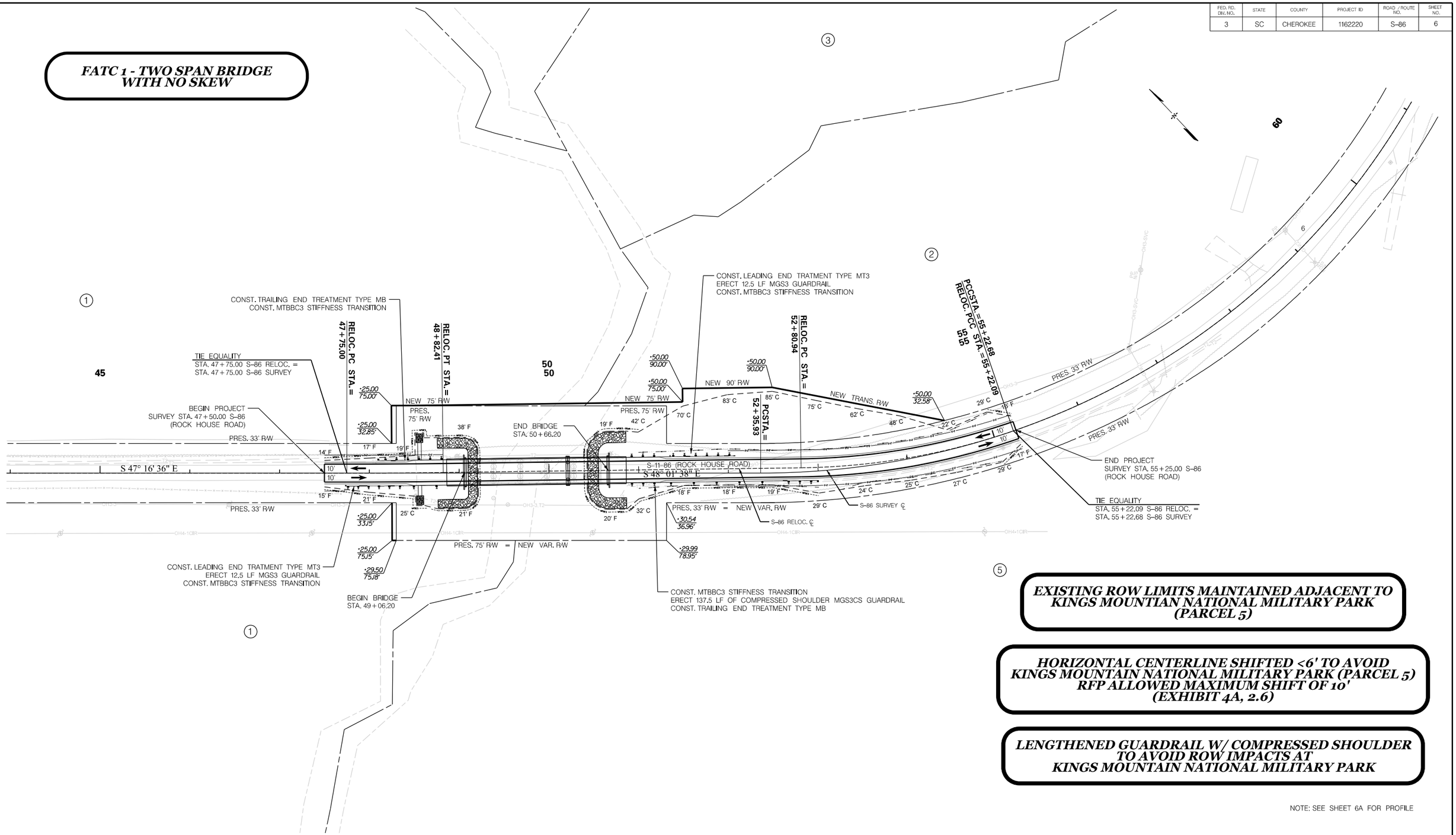

EXISTING ROW LIMITS MAINTAINED ADJACENT TO KINGS MOUNTIAN NATIONAL MILITARY PARK (PARCEL 5)

HORIZONTAL CENTERLINE SHIFTED <6' TO AVOID KINGS MOUNTAIN NATIONAL MILITARY PARK (PARCEL 5) RFP ALLOWED MAXIMUM SHIFT OF 10' (EXHIBIT 4A, 2.6)

LENGTHENED GUARDRAIL W/ COMPRESSED SHOULDER TO AVOID ROW IMPACTS AT KINGS MOUNTAIN NATIONAL MILITARY PARK

NOTE: SEE SHEET 6A FOR PROFILE

lane

0 25' 50' 100'
SCALE : 1" = 50'

ALIGNMENT CONTROL CAN BE FOUND ON REFERENCE DATA SHEET 5A

INFRASTRUCTURE CONSULTING & ENGINEERING

PRELIMINARY
NOT FOR CONSTRUCTION

SCALE: 1" = 50'

REV. NO.	BY	DATE	DESCRIPTION OF REVISION
7			
6			
5			
4			
3			
2			
1			

SOUTH CAROLINA DEPARTMENT OF TRANSPORTATION

PLAN AND PROFILE SHEET

S-86 (ROCK HOUSE ROAD)
OVER KINGS CREEK

Z:\Projects\22-6\Bridge Package 14\S-86 over Kings Creek\Roadway\PLANS\SHT_06.dgn
10/19/2022

FED. RD. DIV. NO.	STATE	COUNTY	PROJECT ID	ROAD / ROUTE NO.	SHEET NO.
3	SC	CHEROKEE	1162220	S-86	6A

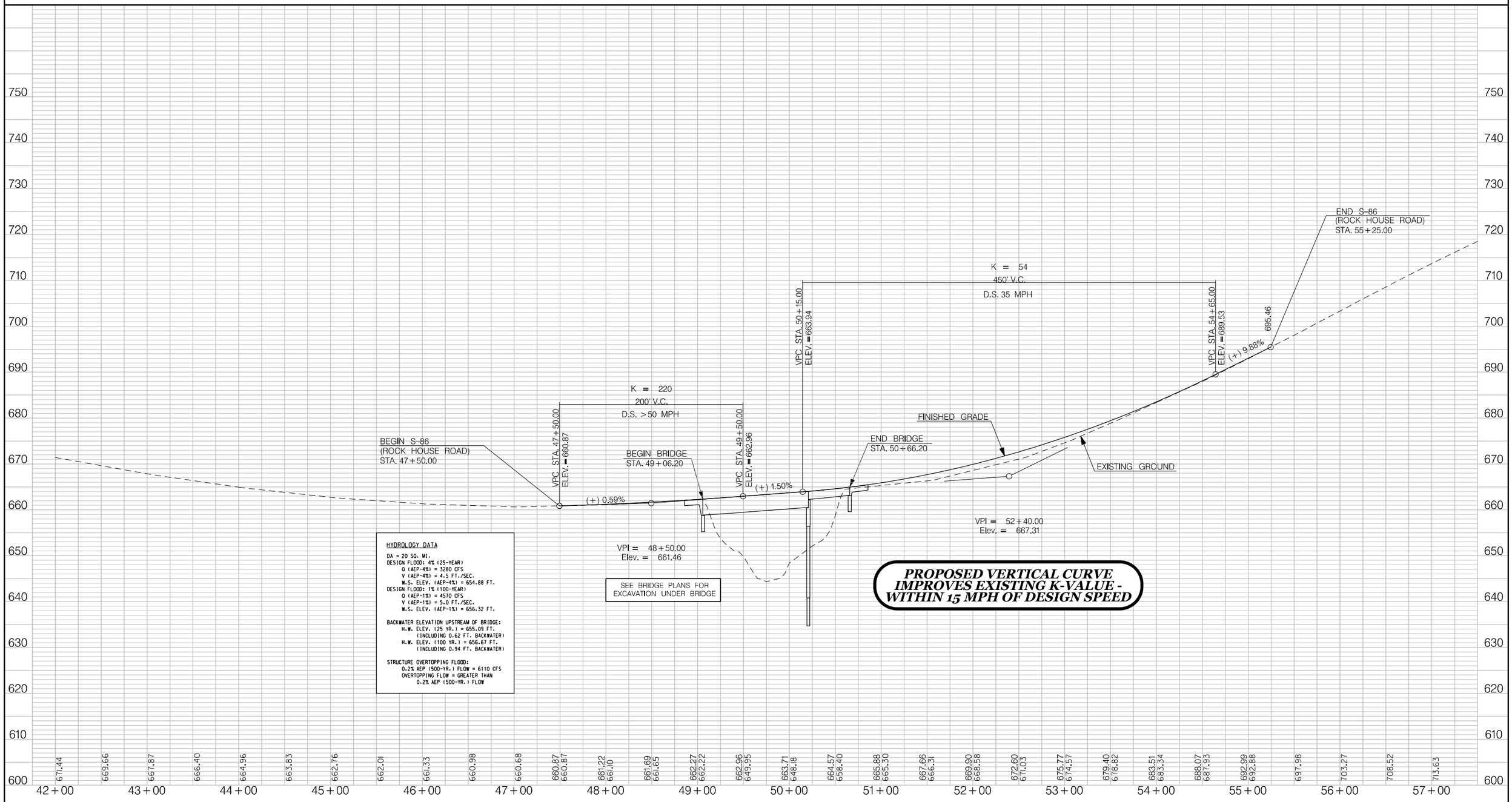

HYDROLOGY DATA

DA = 20 SQ. MI.
DESIGN FLOOD: 4% (25-YEAR)
Q (AEP-4%) = 3280 CFS
V (AEP-4%) = 4.5 FT./SEC.
W.S. ELEV. (AEP-4%) = 654.88 FT.
DESIGN FLOOD: 1% (100-YEAR)
Q (AEP-1%) = 4570 CFS
V (AEP-1%) = 5.0 FT./SEC.
W.S. ELEV. (AEP-1%) = 656.32 FT.

BACKWATER ELEVATION UPSTREAM OF BRIDGE:
H.W. ELEV. (25 YR.) = 655.09 FT.
(INCLUDING 0.62 FT. BACKWATER)
H.W. ELEV. (100 YR.) = 656.67 FT.
(INCLUDING 0.94 FT. BACKWATER)

STRUCTURE OVERTOPPING FLOOD:
0.2% AEP (500-YR.) FLOW = 6110 CFS
OVERTOPPING FLOW = GREATER THAN
0.2% AEP (500-YR.) FLOW

lane

0 25' 50' 100'
SCALE : 1" = 50'

ALIGNMENT CONTROL CAN BE FOUND ON REFERENCE DATA SHEET

INFRASTRUCTURE
CONSULTING & ENGINEERING

PRELIMINARY
NOT FOR CONSTRUCTION

HORIZONTAL SCALE: 1" = 50' VERTICAL SCALE: 1" = 10'

REV. NO.	BY	DATE	DESCRIPTION OF REVISION
7			
6			
5			
4			
3			
2			
1			

SOUTH CAROLINA DEPARTMENT OF TRANSPORTATION

PLAN AND PROFILE SHEET

S-86 (ROCK HOUSE ROAD)
OVER KINGS CREEK

Z:\Projects\22-6\Bridge Package 14\S-86 over Kings Creek\Roadway\PLANS\SHT_06A.dgn
10/19/2022

SHEET NO.	TOTAL SHEETS
1	4

INDEX OF SHEETS

SHEET NO.	DESCRIPTION	SHEET
1	TITLE SHEET	1
1A	RIGHT-OF-WAY TITLE SHEET	OMITTED
2	SUMMARY OF ESTIMATED QUANTITIES	OMITTED
3	TYPICAL SECTIONS	1
4	RIGHT-OF-WAY DATA SHEET	OMITTED
4A	PROPERTY STRIP MAP	OMITTED
5	GENERAL CONSTRUCTION NOTE	OMITTED
5A	REFERENCE DATA SHEET	1
6	PLAN AND PROFILE SHEET	1
TC1	TRAFFIC CONTROL SHEET	OMITTED
PM1	PAVEMENT MARKING AND SIGNING SHEET	OMITTED
EC1 – EC2	EROSION CONTROL SHEETS	OMITTED
U1	UTILITY SHEET	OMITTED
X1 – X5	CROSS SECTIONS	OMITTED
		4

SCDOT
South Carolina Department of Transportation

PROPOSED PLANS FOR

CHEROKEE COUNTY

PROJECT ID: 1162220

S-106 (ISLAND CREEK ROAD)

ROADWAY APPROACHES TO BRIDGE OVER BRANCH OF SUCK CREEK

BRIDGE PLANS BOUND UNDER A SEPARATE COVER

Design Reference for these plans is the:
2021
SCDOT "Roadway Design Manual"

Hydraulic Design Reference for these plans is the:
2009
Edition of SCDOT's "Requirements for Hydraulic Design Studies"

PROJECT: 1162220 S-106
(ISLAND CREEK ROAD)
STA. 29+00.00 TO STA. 35+00.00
SEE SHEET 6

CONSTRUCT 60.00' PRESTRESSED CONCRETE CORED SLAB BRIDGE
STA. 31+70.00 TO STA. 32+30.00
(SEE BRIDGE PLANS)

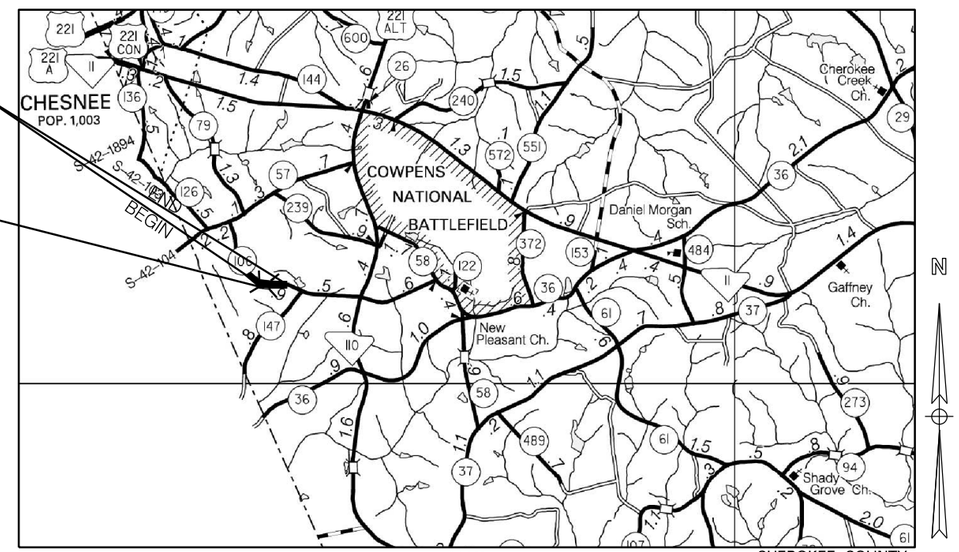

LAYOUT
NOT TO SCALE

CHEROKEE COUNTY

3 DAYS BEFORE DIGGING IN SOUTH CAROLINA
CALL 811
SOUTH CAROLINA 811 (SC811)
WWW.SC811.COM
ALL UTILITIES MAY NOT BE A MEMBER OF SC811

RAILROAD INVOLVEMENT?
YES / NO

TRAFFIC DATA

2020	ADT	225
2040	ADT	329
TRUCKS		8 %

NET LENGTH OF ROADWAY	0.103	MILES
NET LENGTH OF BRIDGES	0.011	MILES
NET LENGTH OF PROJECT	0.114	MILES
LENGTH OF EXCEPTIONS	0.000	MILES
GROSS LENGTH OF PROJECT	0.114	MILES

NOTE: EXCEPT AS MAY BE OTHERWISE SPECIFIED ON THE PLANS OR IN THE SPECIAL PROVISIONS, ALL MATERIALS AND WORKMANSHIP ON THIS PROJECT SHALL CONFORM TO THE SOUTH CAROLINA DEPARTMENT OF TRANSPORTATION STANDARD SPECIFICATIONS FOR HIGHWAY CONSTRUCTION (2007 EDITION) AND THE STANDARD DRAWINGS FOR ROAD CONSTRUCTION IN EFFECT AT THE TIME OF FINAL RFP.

lane

INFRASTRUCTURE CONSULTING & ENGINEERING

ENGINEER OF RECORD

PRELIMINARY
NOT FOR CONSTRUCTION

FOR CONSTRUCTION : DATE

$$user$$
ridge Package 14\S-106 over Suck Creek\Roadway\PLANS\SHT_01.dgn
10/19/2022

std_form3.dgn

FED. RD. DIV. NO.	STATE	COUNTY	PROJECT ID	ROAD / ROUTE NO.	SHEET NO.
3	SC	CHEROKEE	1162220	S-106	3

■ VARIABLE – SEE PLANS & CROSS SECTIONS

ADD 3.75 WHERE GUARDRAIL IS ERECTED

* PROVIDE NON-MOW STRIP FOR GUARDRAIL IN ACCORDANCE WITH STD. DWG. 805-525-01

1

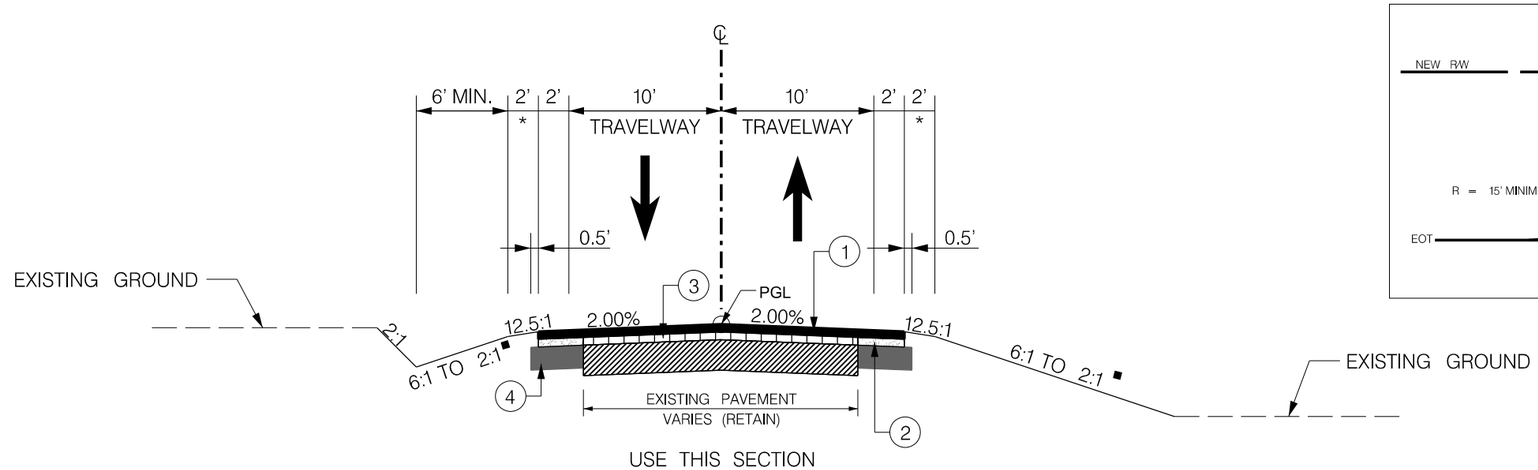

USE THIS SECTION
S-106 (ISLAND CREEK ROAD)
STA. 29+00.00 TO +/- STA. 29+85.00
+/- STA. 34+08.00 TO STA. 35+00.00

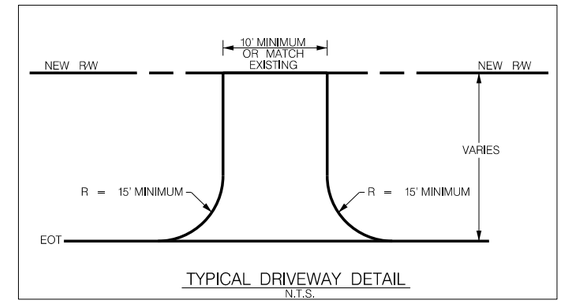

TYPICAL DRIVEWAY DETAIL
N.T.S.

2

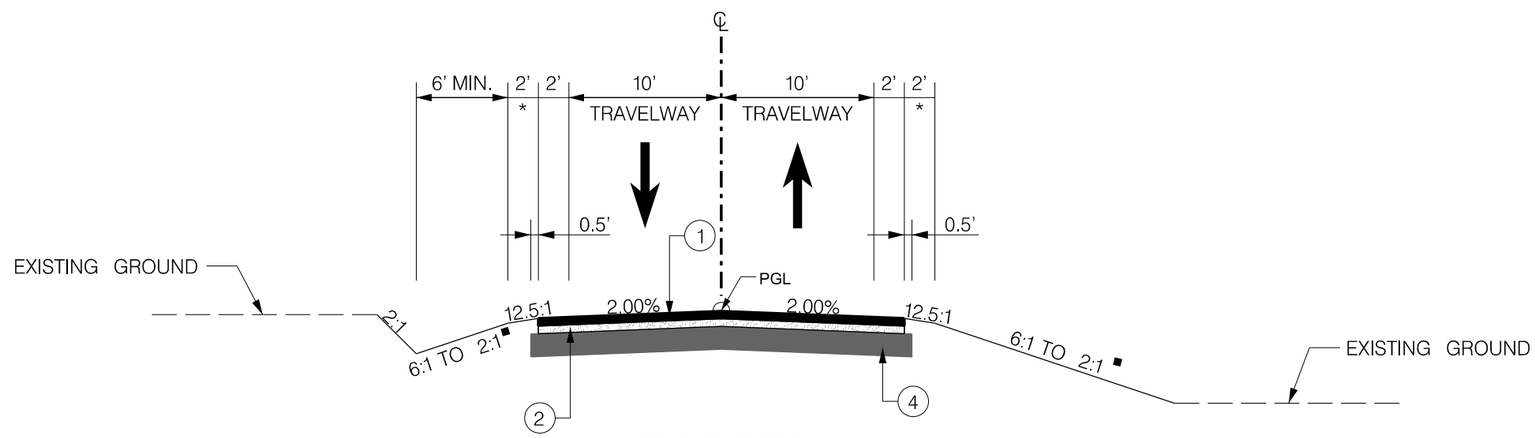

USE THIS SECTION
S-106 (ISLAND CREEK ROAD)
+/- STA. 29+85.00 TO STA. 31+50.00
STA. 32+50.00 +/- STA. 34+08.00

①	HOT MIX ASPHALT SURFACE COURSE	
②	HOT MIX ASPHALT INTERMEDIATE COURSE	
③	VARIABLE HOT MIX ASPHALT FOR BUILDUP	
④	HOT MIX ASPHALT BASE COURSE OR GABC	

SEE RFP EXHIBIT 4C FOR PAVEMENT STRUCTURE

lane

INFRASTRUCTURE CONSULTING & ENGINEERING

FUNCTIONAL CLASSIFICATION

RURAL MAJOR COLLECTOR

RTE. S-106	DESIGN SPEED	
MPH	FROM STA.	TO STA.
35	29+00.00	35+00.00
EXCEPTIONS TO DESIGN SPEED		

PRELIMINARY
NOT FOR CONSTRUCTION

N.T.S.

REV. NO.	BY	DATE	DESCRIPTION OF REVISION
7			
6			
5			
4			
3			
2			
1			

SOUTH CAROLINA DEPARTMENT OF TRANSPORTATION

TYPICAL SECTION

S-106 (ISLAND CREEK ROAD)
OVER BRANCH OF SUCK CREEK

Z:\Projects\22-6\Bridge Package 14\S-106 over Suck Creek\Roadway\PLANS\SHT_03.dgn
10/19/2022

FED. RD. DIV. NO.	STATE	COUNTY	PROJECT ID	ROAD / ROUTE NO.	SHEET NO.
3	SC	CHEROKEE	1162220	S-106	5A

Beginning chain S106 description

Curve Data

Curve S106A
P.I. Station 18+76.05 N 1,198,790.7816 E 1,749,459.0153
Delta = 45° 44' 10.54" (LT)
Degree = 4° 01' 42.92"
Tangent = 599.8413
Length = 1,135.2924
Radius = 1,422.2295
External = 121.3204
Long Chord = 1,105.3895
Mid. Ord. = 111.7848
P.C. Station 12+76.21 N 1,199,389.3152 E 1,749,419.4296
P.T. Station 24+11.50 N 1,198,401.3764 E 1,749,915.2753
C.C. N 1,199,483.1733 E 1,750,838.5587
Back = S 3° 47' 02.06" E
Ahead = S 49° 31' 12.61" E
Chord Bear = S 26° 39' 07.33" E

DS = RETAIN EXIST.
eMAX = RETAIN EXIST.
e = RETAIN EXIST.
LG% = RETAIN EXIST.

Course from PT S106A to PC S106B S 49° 31' 12.61" E Dist 274.0708

Curve Data

Curve S106B
P.I. Station 28+11.40 N 1,198,141.7736 E 1,750,219.4479
Delta = 10° 02' 24.18" (LT)
Degree = 4° 00' 00.03"
Tangent = 125.8225
Length = 251.0007
Radius = 1,432.3917
External = 5.5156
Long Chord = 250.6797
Mid. Ord. = 5.4944
P.C. Station 26+85.57 N 1,198,223.4551 E 1,750,123.7430
P.T. Station 29+36.57 N 1,198,078.0278 E 1,750,327.9273
C.C. N 1,199,312.9817 E 1,751,053.6235
Back = S 49° 31' 12.61" E
Ahead = S 59° 33' 36.78" E
Chord Bear = S 54° 32' 24.70" E

DS = RETAIN EXIST.
eMAX = RETAIN EXIST.
e = RETAIN EXIST.
LG% = RETAIN EXIST.

Curve Data

Curve S106C
P.I. Station 32+63.77 N 1,197,912.2611 E 1,750,610.0209
Delta = 38° 57' 34.66" (LT)
Degree = 6° 11' 38.90"
Tangent = 327.1929
Length = 628.9757
Radius = 924.9999
External = 56.1627
Long Chord = 616.9282
Mid. Ord. = 52.9479
P.C. Station 29+36.57 N 1,198,078.0277 E 1,750,327.9275
P.T. Station 35+65.55 N 1,197,960.7354 E 1,750,933.6031
C.C. N 1,198,875.5275 E 1,750,796.5626
Back = S 59° 33' 36.78" E
Ahead = N 81° 28' 48.55" E
Chord Bear = S 79° 02' 24.12" E

DS = 35 MPH
eMAX = 6%
e = 4.4%
LG-PC = 0.62%
LG-PT = 0.62%

Course from PT S106C to PC S106D N 81° 28' 48.55" E Dist 257.2138

Curve Data

Curve S106D
P.I. Station 40+50.27 N 1,198,032.5471 E 1,751,412.9706
Delta = 26° 56' 05.13" (RT)
Degree = 6° 01' 52.09"
Tangent = 227.5027
Length = 446.5950
Radius = 949.9996
External = 26.8611
Long Chord = 442.4941
Mid. Ord. = 26.1224
P.C. Station 38+22.76 N 1,197,998.8421 E 1,751,187.9784
P.T. Station 42+69.36 N 1,197,960.6799 E 1,751,628.8238
C.C. N 1,197,059.3261 E 1,751,328.7228
Back = N 81° 28' 48.55" E
Ahead = S 71° 35' 06.32" E
Chord Bear = S 85° 03' 08.89" E

DS = RETAIN EXIST.
eMAX = RETAIN EXIST.
e = RETAIN EXIST.
LG% = RETAIN EXIST.

Curve Data

Curve S106E
P.I. Station 43+99.01 N 1,197,919.7227 E 1,751,751.8388
Delta = 7° 48' 27.03" (RT)
Degree = 3° 00' 56.12"
Tangent = 129.6532
Length = 258.9049
Radius = 1,899.9865
External = 4.4186
Long Chord = 258.7047
Mid. Ord. = 4.4083
P.C. Station 42+69.36 N 1,197,960.6796 E 1,751,628.8247
P.T. Station 45+28.26 N 1,197,862.4346 E 1,751,868.1488
C.C. N 1,196,157.9841 E 1,751,028.6266
Back = S 71° 35' 06.32" E
Ahead = S 63° 46' 39.29" E
Chord Bear = S 67° 40' 52.81" E

DS = RETAIN EXIST.
eMAX = RETAIN EXIST.
e = RETAIN EXIST.
LG% = RETAIN EXIST.

Course from PT S106E to 223 S 63° 46' 39.29" E Dist 325.5825

Point 223 N 1,197,718.5737 E 1,752,160.2241 Sta 48+53.85

Ending chain S106 description

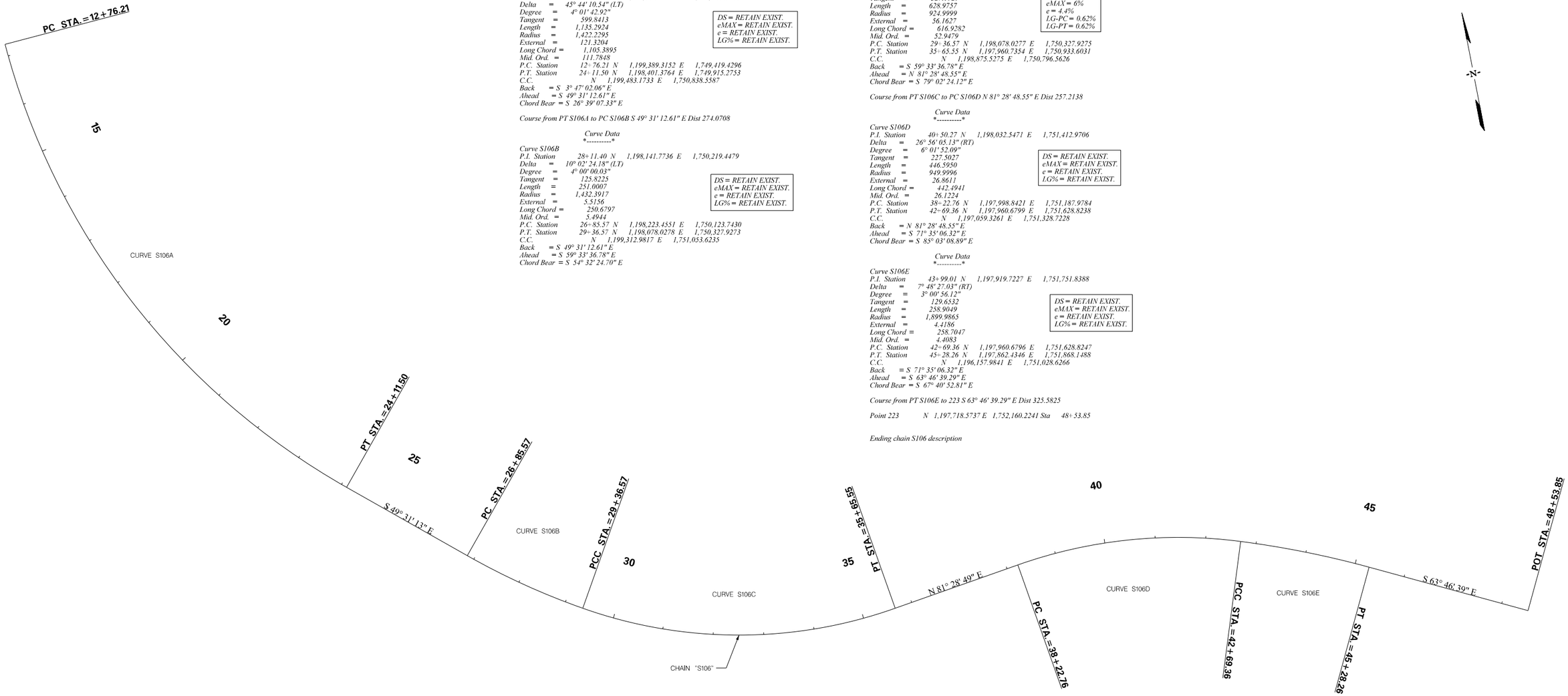

lane

0 50' 100' 200'
SCALE : 1" = 100'

INFRASTRUCTURE CONSULTING & ENGINEERING

PRELIMINARY
NOT FOR CONSTRUCTION

SCALE: 1" = 100'

REV. NO.	BY	DATE	DESCRIPTION OF REVISION
7			
6			
5			
4			
3			
2			
1			

SOUTH CAROLINA DEPARTMENT OF TRANSPORTATION

REFERENCE DATA SHEET

S-106 (ISLAND CREEK ROAD)
OVER SUCK CREEK

Z:\Projects\22-6\Bridge Package 14\S-106 over Suck Creek\Roadway\PLANS\SHT_05A.dgn
10/19/2022

FED. RD. DIV. NO.	STATE	COUNTY	PROJECT ID	ROAD / ROUTE NO.	SHEET NO.
3	SC	CHEROKEE	1162220	S-106	6

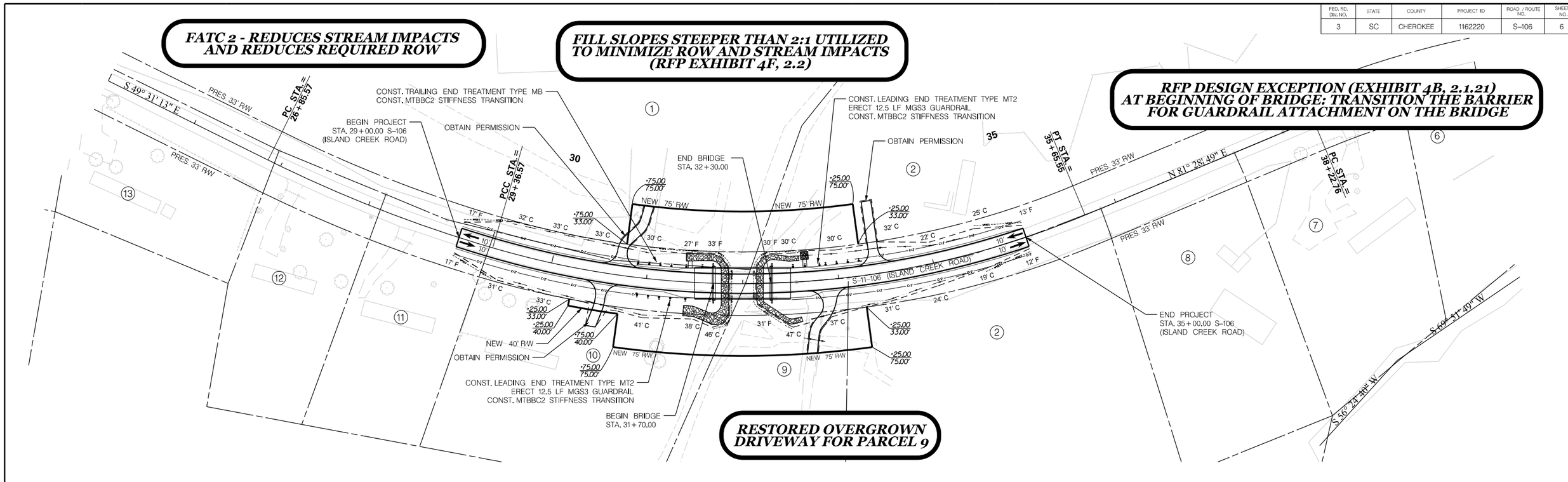

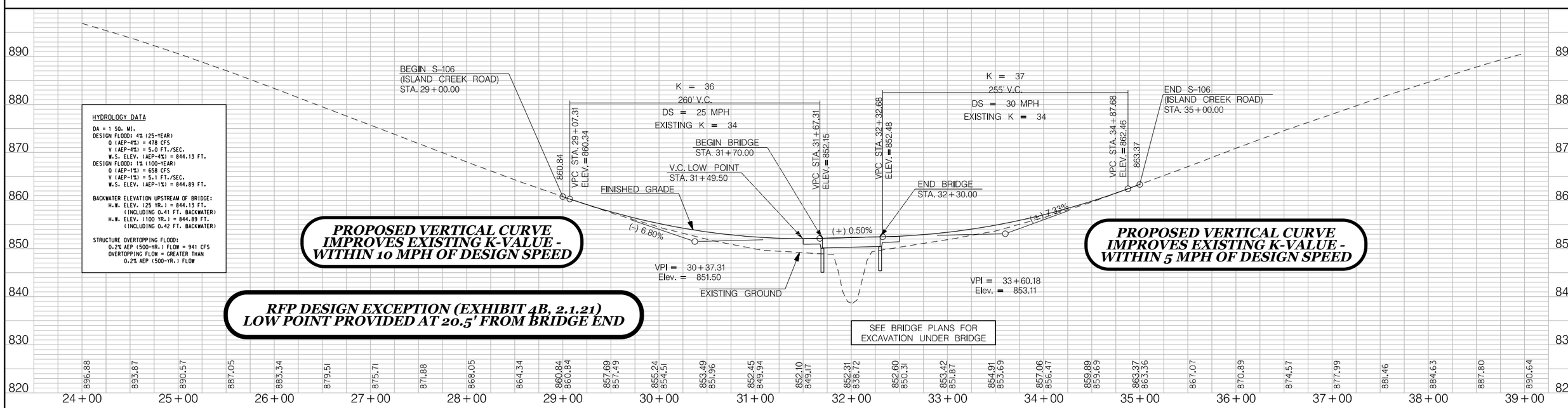

lane

0 25' 50' 100'
SCALE : 1" = 50'

ALIGNMENT CONTROL CAN BE FOUND ON REFERENCE DATA SHEET 5A

INFRASTRUCTURE CONSULTING & ENGINEERING

PRELIMINARY
NOT FOR CONSTRUCTION

HORIZONTAL SCALE: 1" = 50' VERTICAL SCALE: 1" = 10'

REV. NO.	BY	DATE	DESCRIPTION OF REVISION
7			
6			
5			
4			
3			
2			
1			

SOUTH CAROLINA DEPARTMENT OF TRANSPORTATION

PLAN AND PROFILE SHEET

S-106 (ISLAND CREEK ROAD) OVER BRANCH OF SUCK CREEK

Z:\Projects\22-6\Bridge Package 14\S-106 over Suck Creek\Roadway\PLANS\SHT_06.dgn
10/19/2022

SHEET NO.	TOTAL SHEETS
1	4

INDEX OF SHEETS

SHEET NO.	DESCRIPTION	SHEET
1	TITLE SHEET	1
1A	RIGHT-OF-WAY TITLE SHEET	OMITTED
2	SUMMARY OF ESTIMATED QUANTITIES	OMITTED
3	TYPICAL SECTIONS	1
4	RIGHT-OF-WAY DATA SHEET	OMITTED
4A	PROPERTY STRIP MAP	OMITTED
5	GENERAL CONSTRUCTION NOTE	OMITTED
5A	REFERENCE DATA SHEET	1
6	PLAN AND PROFILE SHEET	1
TC1	TRAFFIC CONTROL SHEET	OMITTED
PM1	PAVEMENT MARKING AND SIGNING SHEET	OMITTED
EC1 – EC2	EROSION CONTROL SHEETS	OMITTED
U1	UTILITY SHEET	OMITTED
X1	CROSS SECTIONS	OMITTED
		4

South Carolina Department of Transportation

PROPOSED PLANS FOR

CHEROKEE COUNTY

PROJECT ID: 1162220

S-56 (MONTGOMERY DRIVE)

ROADWAY APPROACHES TO BRIDGE OVER HORSE CREEK

BRIDGE PLANS BOUND UNDER A SEPARATE COVER

Design Reference for these plans is the:
2021
SCDOT "Roadway Design Manual"

Hydraulic Design Reference for these plans is the:
2009
Edition of SCDOT's "Requirements for Hydraulic Design Studies"

PROJECT: 1162220 S-56 (MONTGOMERY DRIVE)
STA. 32+57.00 TO STA. 35+80.00
SEE SHEET 6

CONSTRUCT 50.00' PRESTRESSED CONCRETE CORED SLAB BRIDGE
STA. 34+05.10 TO STA. 34+55.10
(SEE BRIDGE PLANS)

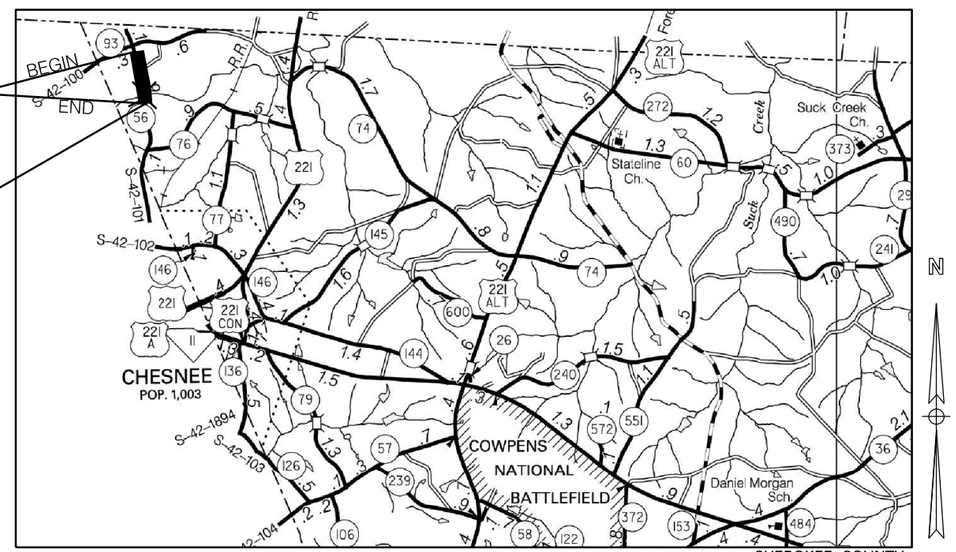

LAYOUT
NOT TO SCALE

3 DAYS BEFORE DIGGING IN SOUTH CAROLINA
CALL 811
SOUTH CAROLINA 811 (SC811)
WWW.SC811.COM
ALL UTILITIES MAY NOT BE A MEMBER OF SC811

RAILROAD INVOLVEMENT?
YES / NO

TRAFFIC DATA

2020	ADT	375	
2040	ADT	480	
TRUCKS		5	%

NET LENGTH OF ROADWAY	0.052	MILES
NET LENGTH OF BRIDGES	0.009	MILES
NET LENGTH OF PROJECT	0.061	MILES
LENGTH OF EXCEPTIONS	0.000	MILES
GROSS LENGTH OF PROJECT	0.061	MILES

EQUALITIES IN STATIONING
NONE

NOTE: EXCEPT AS MAY BE OTHERWISE SPECIFIED ON THE PLANS OR IN THE SPECIAL PROVISIONS, ALL MATERIALS AND WORKMANSHIP ON THIS PROJECT SHALL CONFORM TO THE SOUTH CAROLINA DEPARTMENT OF TRANSPORTATION STANDARD SPECIFICATIONS FOR HIGHWAY CONSTRUCTION (2007 EDITION) AND THE STANDARD DRAWINGS FOR ROAD CONSTRUCTION IN EFFECT AT THE TIME OF FINAL RFP.

lane

INFRASTRUCTURE CONSULTING & ENGINEERING

ENGINEER OF RECORD

PRELIMINARY
NOT FOR CONSTRUCTION

FOR CONSTRUCTION : DATE

$$user$$
ridge Package 14\S-56 over Horse Creek\Roadway\PLANS\SHT_01.dgn
10/19/2022

std. form13.dgn

FED. RD. DIV. NO.	STATE	COUNTY	PROJECT ID	ROAD / ROUTE NO.	SHEET NO.
3	SC	CHEROKEE	1162220	S-56	3

■ VARIABLE – SEE PLANS & CROSS SECTIONS

* ADD 3.75' WHERE GUARDRAIL IS ERECTED

PROVIDE NON-MOW STRIP FOR GUARDRAIL IN ACCORDANCE WITH STD. DWG. 805-525-01

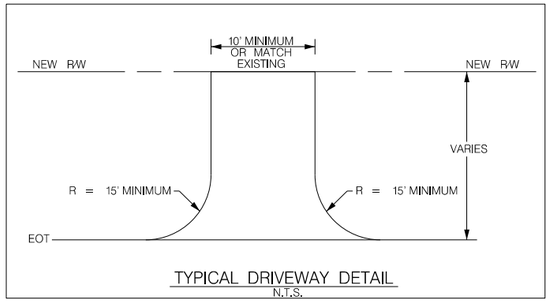

TYPICAL DRIVEWAY DETAIL
N.T.S.

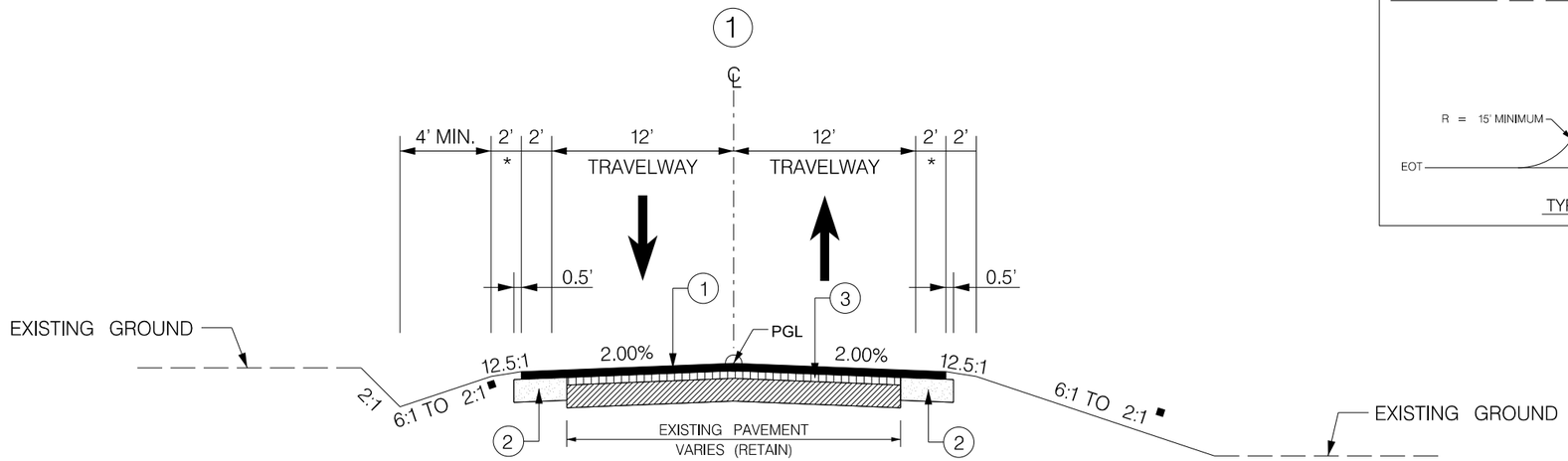

USE THIS SECTION
S-56 (MONTGOMERY DRIVE)
STA. 32+57.00 TO STA. 33+85.10
STA. 34+75.10 TO STA. 35+80.00

① HOT MIX ASPHALT SURFACE COURSE	SEE RFP EXHIBIT 4C FOR PAVEMENT STRUCTURE
② HOT MIX ASPHALT BASE COURSE	
③ VARIABLE HOT MIX ASPHALT FOR BUILDUP	

lane

INFRASTRUCTURE CONSULTING & ENGINEERING

FUNCTIONAL CLASSIFICATION

RURAL LOCAL GROUP 4

RTE. S-56	DESIGN SPEED	
MPH	FROM STA.	TO STA.
30	32+57.00	35+80.00
EXCEPTIONS TO DESIGN SPEED		

PRELIMINARY
NOT FOR CONSTRUCTION

N.T.S.

REV. NO.	BY	DATE	DESCRIPTION OF REVISION
7			
6			
5			
4			
3			
2			
1			

SOUTH CAROLINA DEPARTMENT OF TRANSPORTATION

TYPICAL SECTION

S-56 (MONTGOMERY DRIVE)
OVER HORSE CREEK

Z:\Projects\22-6\Bridge Package 14\S-56 over Horse Creek\Roadway\PLANS\SHT_03.dgn
10/19/2022

FED. RD. DIV. NO.	STATE	COUNTY	PROJECT ID	ROAD / ROUTE NO.	SHEET NO.
3	SC	CHEROKEE	1162220	S-56	5A

Beginning chain S56 description

Point 400 N 1,219,931.5147 E 1,740,590.3430 Sta 7+19.53

Course from 400 to PC S56A S 24° 42' 00.02" E Dist 356.2133

Curve Data

Curve S56A
P.I. Station 12+84.86 N 1,219,417.9046 E 1,740,826.5773
Delta = 8° 21' 00.01" (RT)
Degree = 2° 00' 00.01"
Tangent = 209.1202
Length = 417.4999
Radius = 2,864.7869
External = 7.6224
Long Chord = 417.1305
Mid. Ord. = 7.6022
P.C. Station 10+75.74 N 1,219,607.8920 E 1,740,739.1928
P.T. Station 14+93.24 N 1,219,217.2412 E 1,740,885.4455
C.C. N 1,218,410.7917 E 1,738,136.5106
Back = S 24° 42' 00.02" E
Ahead = S 16° 21' 00.00" E
Chord Bear = S 20° 31' 30.01" E

DS = RETAIN EXIST.
eMAX = RETAIN EXIST.
e = RETAIN EXIST.
LG-PC = RETAIN EXIST.
LG-PT = RETAIN EXIST.

Course from PT S56A to PC S56B S 16° 21' 00.00" E Dist 240.8798

Curve Data

Curve S56B
P.I. Station 18+94.04 N 1,218,832.6523 E 1,740,998.2716
Delta = 6° 23' 24.23" (LT)
Degree = 2° 00' 00.00"
Tangent = 159.9174
Length = 319.5032
Radius = 2,864.7886
External = 4.4600
Long Chord = 319.3376
Mid. Ord. = 4.4530
P.C. Station 17+34.12 N 1,218,986.1026 E 1,740,953.2542
P.T. Station 20+53.63 N 1,218,685.1636 E 1,741,060.0878
C.C. N 1,219,792.3526 E 1,743,702.1907
Back = S 16° 21' 00.00" E
Ahead = S 22° 44' 24.23" E
Chord Bear = S 19° 32' 42.12" E

DS = RETAIN EXIST.
eMAX = RETAIN EXIST.
e = RETAIN EXIST.
LG-PC = RETAIN EXIST.
LG-PT = RETAIN EXIST.

Course from PT S56B to PC S56C S 22° 44' 24.23" E Dist 144.6240

Curve Data

Curve S56C
P.I. Station 23+85.03 N 1,218,379.5199 E 1,741,188.1934
Delta = 14° 51' 31.76" (RT)
Degree = 4° 00' 00.05"
Tangent = 186.7826
Length = 371.4692
Radius = 1,432.3894
External = 12.1268
Long Chord = 370.4292
Mid. Ord. = 12.0250
P.C. Station 21+98.25 N 1,218,551.7835 E 1,741,115.9924
P.T. Station 25+69.72 N 1,218,194.5015 E 1,741,213.8051
C.C. N 1,217,998.0919 E 1,739,794.9454
Back = S 22° 44' 24.23" E
Ahead = S 7° 52' 52.47" E
Chord Bear = S 15° 18' 38.35" E

DS = RETAIN EXIST.
eMAX = RETAIN EXIST.
e = RETAIN EXIST.
LG-PC = RETAIN EXIST.
LG-PT = RETAIN EXIST.

Course from PT S56C to PC S56D S 7° 52' 52.47" E Dist 804.9963

Curve Data

Curve S56D
P.I. Station 34+78.01 N 1,217,294.7883 E 1,741,338.3504
Delta = 2° 03' 56.45" (RT)
Degree = 0° 59' 59.96"
Tangent = 103.2963
Length = 206.5703
Radius = 5,729.6406
External = 0.9311
Long Chord = 206.5591
Mid. Ord. = 0.9309
P.C. Station 33+74.72 N 1,217,397.1089 E 1,741,324.1864
P.T. Station 35+81.29 N 1,217,192.0236 E 1,741,348.8171
C.C. N 1,216,611.4591 E 1,735,648.6656
Back = S 7° 52' 52.47" E
Ahead = S 5° 48' 56.02" E
Chord Bear = S 6° 50' 54.25" E

DS = 30 MPH
eMAX = 6%
e = N.C.
LG-PC = N/A
LG-PT = N/A

Course from PT S56D to PC S56E S 5° 48' 56.02" E Dist 867.7406

Curve Data

Curve S56E
P.I. Station 46+08.03 N 1,216,170.5644 E 1,741,452.8534
Delta = 7° 56' 14.80" (LT)
Degree = 2° 30' 00.01"
Tangent = 159.0030
Length = 317.4973
Radius = 2,291.8276
External = 5.5091
Long Chord = 317.2435
Mid. Ord. = 5.4958
P.C. Station 44+49.03 N 1,216,328.7491 E 1,741,436.7422
P.T. Station 47+66.52 N 1,216,016.1200 E 1,741,490.6543
C.C. N 1,216,560.9720 E 1,743,716.7743
Back = S 5° 48' 56.02" E
Ahead = S 13° 45' 10.83" E
Chord Bear = S 9° 47' 03.42" E

DS = RETAIN EXIST.
eMAX = RETAIN EXIST.
e = RETAIN EXIST.
LG-PC = RETAIN EXIST.
LG-PT = RETAIN EXIST.

Course from PT S56E to PC S56F S 13° 45' 10.83" E Dist 324.3609

Curve Data

Curve S56F
P.I. Station 53+42.30 N 1,215,456.8492 E 1,741,627.5381
Delta = 36° 25' 59.74" (RT)
Degree = 7° 29' 59.99"
Tangent = 251.4178
Length = 485.7770
Radius = 763.9440
External = 40.3080
Long Chord = 477.6341
Mid. Ord. = 38.2878
P.C. Station 50+90.88 N 1,215,701.0587 E 1,741,567.7668
P.T. Station 55+76.66 N 1,215,224.8733 E 1,741,530.5944
C.C. N 1,215,519.4410 E 1,740,825.7254
Back = S 13° 45' 10.83" E
Ahead = S 22° 40' 48.92" W
Chord Bear = S 4° 27' 49.05" W

DS = RETAIN EXIST.
eMAX = RETAIN EXIST.
e = RETAIN EXIST.
LG-PC = RETAIN EXIST.
LG-PT = RETAIN EXIST.

Course from PT S56F to 427 S 22° 40' 48.92" W Dist 243.9352

Point 427 N 1,214,999.8014 E 1,741,436.5359 Sta 58+20.60

Ending chain S56 description

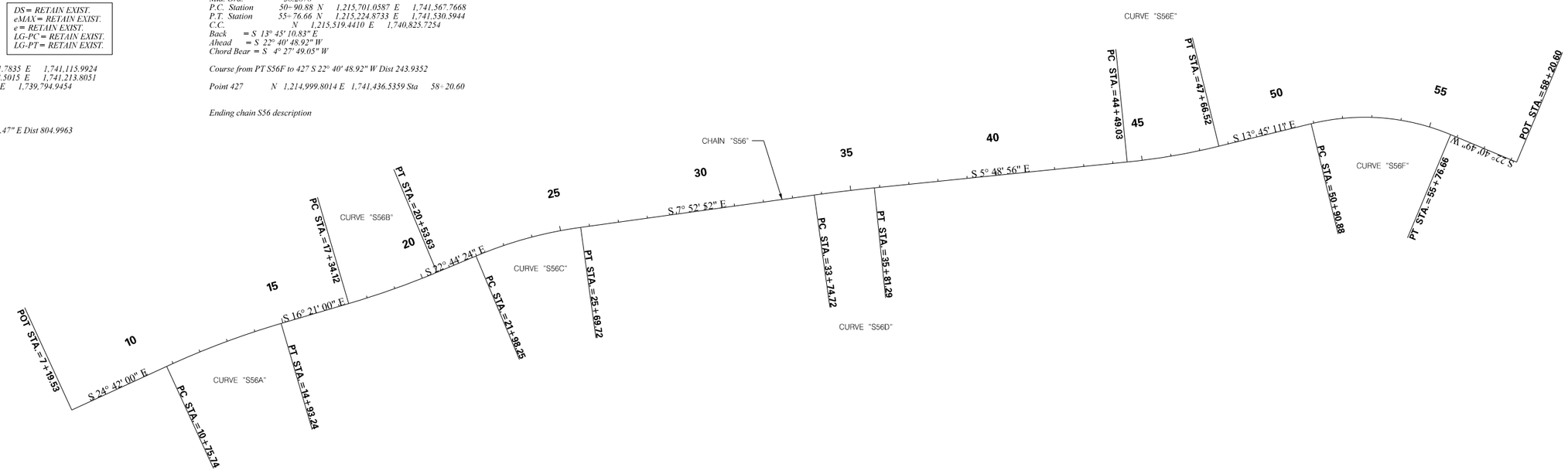

lane

0 100' 200' 400'
SCALE : 1" = 200'

INFRASTRUCTURE CONSULTING & ENGINEERING

PRELIMINARY
NOT FOR CONSTRUCTION

SCALE: 1" = 100'

REV. NO.	BY	DATE	DESCRIPTION OF REVISION
7			
6			
5			
4			
3			
2			
1			

SOUTH CAROLINA DEPARTMENT OF TRANSPORTATION

REFERENCE DATA SHEET

S-56 (MONTGOMERY DRIVE)
OVER HORSE CREEK

Z:\Projects\22-6\Bridge Package 14\S-56 over Horse Creek\Roadway\PLANS\SHT_05A.dgn
10/19/2022

FED. RD. DIV. NO.	STATE	COUNTY	PROJECT ID	ROAD / ROUTE NO.	SHEET NO.
3	SC	CHEROKEE	1162220	S-56	6

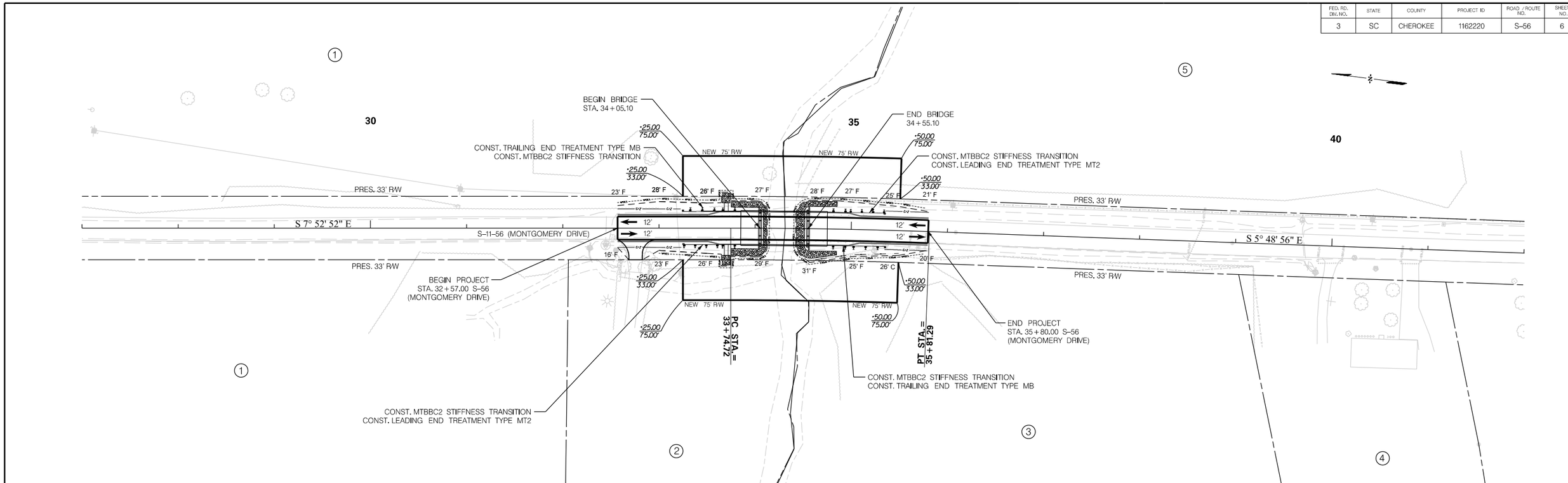

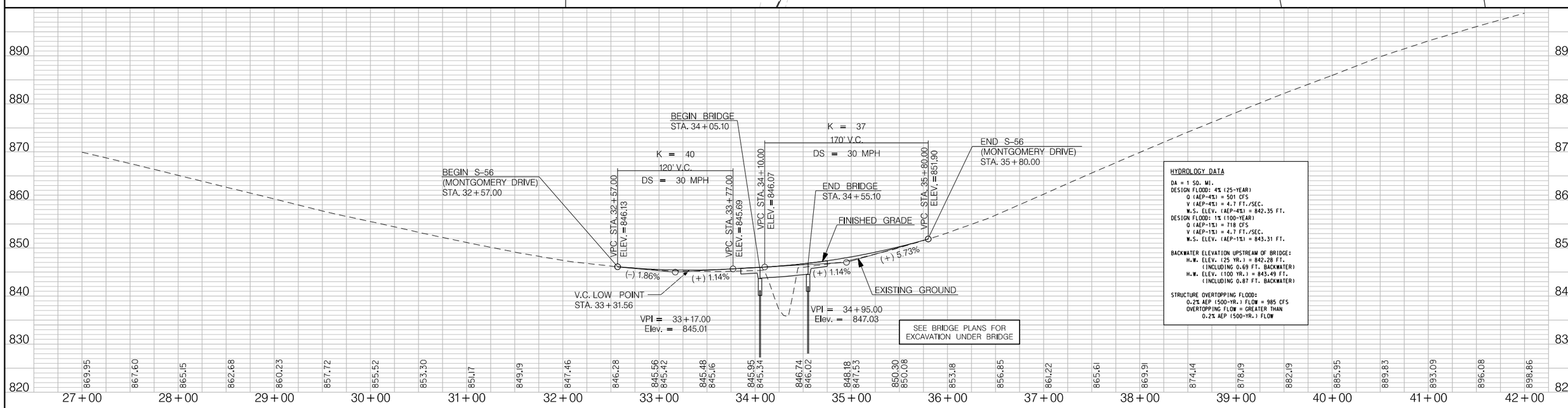

HYDROLOGY DATA

DA = 1 SQ. MI.
DESIGN FLOOD: 4% (25-YEAR)
Q (AEP-4%) = 501 CFS
V (AEP-4%) = 4.7 FT./SEC.
W.S. ELEV. (AEP-4%) = 842.35 FT.
DESIGN FLOOD: 1% (100-YEAR)
Q (AEP-1%) = 718 CFS
V (AEP-1%) = 4.7 FT./SEC.
W.S. ELEV. (AEP-1%) = 843.31 FT.

BACKWATER ELEVATION UPSTREAM OF BRIDGE:
H.W. ELEV. (25 YR.) = 842.28 FT.
(INCLUDING 0.69 FT. BACKWATER)
H.W. ELEV. (100 YR.) = 843.49 FT.
(INCLUDING 0.87 FT. BACKWATER)

STRUCTURE OVERTOPPING FLOOD:
0.2% AEP (500-YR.) FLOW = 985 CFS
OVERTOPPING FLOW = GREATER THAN
0.2% AEP (500-YR.) FLOW

lane

0 25' 50' 100'
SCALE : 1" = 50'

ALIGNMENT CONTROL CAN BE FOUND ON REFERENCE DATA SHEET 5A

INFRASTRUCTURE CONSULTING & ENGINEERING

PRELIMINARY
NOT FOR CONSTRUCTION

HORIZONTAL SCALE: 1" = 50' VERTICAL SCALE: 1" = 10'

REV. NO.	BY	DATE	DESCRIPTION OF REVISION
7			
6			
5			
4			
3			
2			
1			

SOUTH CAROLINA DEPARTMENT OF TRANSPORTATION

PLAN AND PROFILE SHEET

S-56 (MONTGOMERY DRIVE)
OVER HORSE CREEK

Z:\Projects\22-6\Bridge Package 14\S-56 over Horse Creek\Roadway\PLANS\SHT_06.dgn
10/19/2022

CONCEPTUAL PLANS

A.2 – Bridge Plans

S-138 over Goucher Creek

S-226 over Unnamed Stream

S-86 over Kings Creek

S-106 over Branch of Suck Creek

S-56 over Horse Creek

APPENDIX A

BRIDGE PLANS ID	SHEET NO.
P041151 - B01	1

South Carolina Department of Transportation

INDEX OF SHEETS

1. TITLE SHEET
2. BRIDGE PLAN AND PROFILE
3. END BENT DETAILS (1)
4. END BENT DETAILS (2)
5. INTERIOR BENT DETAILS
6. SUPERSTRUCTURE TYPICAL SECTION

Design Reference for these plans is the:

LVB

Supplemental Design Criteria For
Low Volume Bridge Replacement Projects

PROPOSED PLANS FOR

CHEROKEE COUNTY
PROJECT ID P041151
STATE ROUTE S-11-138 (GOUCHER SCHOOL ROAD)
REPLACE BRIDGE OVER GOUCHER CREEK

Approximate Location of Bridge is

Latitude 34°58'30" N
Longitude 81°41'39" W

-N-

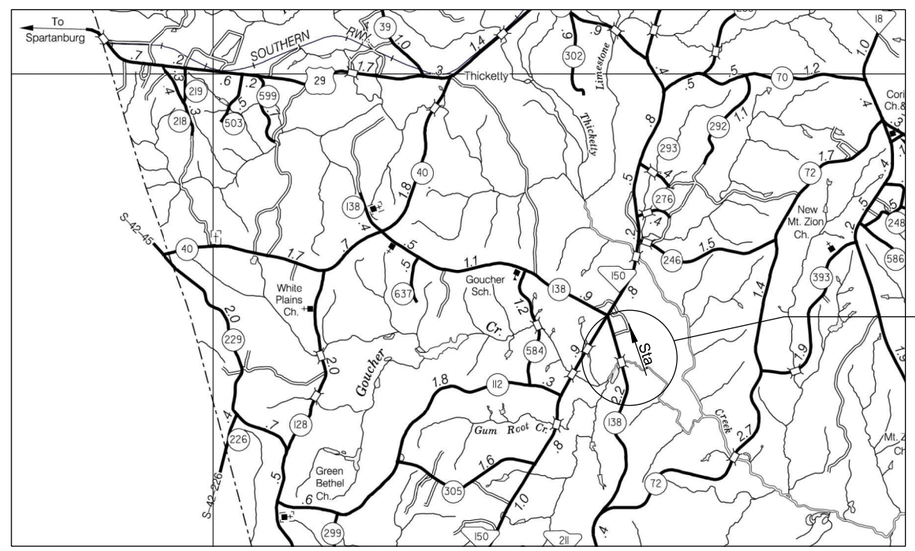

LAYOUT

3 DAYS BEFORE DIGGING IN
SOUTH CAROLINA

CALL 811

SOUTH CAROLINA 811 (SC811)
WWW.SC811.COM
ALL UTILITIES MAY NOT BE A MEMBER OF SC811

ASSET ID NOT ASSIGNED

TRAFFIC DATA

2020 ADT 750 V.P.D.

2040 ADT 1,095 V.P.D.

TRUCKS 8 %

NET LENGTH OF ROADWAY	0.000	MILES
NET LENGTH OF BRIDGES	0.022	MILES
NET LENGTH OF PROJECT	0.022	MILES
LENGTH OF EXCEPTIONS	0.000	MILES
GROSS LENGTH OF PROJECT	0.022	MILES

NOTE: EXCEPT AS MAY OTHERWISE BE SPECIFIED ON THE PLANS OR IN THE SPECIAL PROVISIONS, ALL MATERIALS AND WORKMANSHIP ON THIS PROJECT SHALL CONFORM TO THE SOUTH CAROLINA DEPARTMENT OF TRANSPORTATION STANDARD SPECIFICATIONS FOR HIGHWAY CONSTRUCTION (2007 EDITION) AND THE STANDARD DRAWINGS FOR ROAD CONSTRUCTION IN EFFECT AT THE TIME OF THE RELEASE OF THE FINAL RFP.

lane

INFRASTRUCTURE CONSULTING & ENGINEERING

PLANS PREPARED BY:

INFRASTRUCTURE CONSULTING & ENGINEERING

110 MIDLANDS COURT
WEST COLUMBIA, SC 29169
Telephone: (803) 822-0333

ENGINEER OF RECORD

TECHNICAL PROPOSAL PLANS

FOR CONSTRUCTION : _____ _____ DATE

REVIEWED		
DR.	JLJ	WRS
	BY	CHK

WRS 09-22 DATE

Z:\Projects\22-6\Bridge Package 14\S-138 over Goucher Creek\Structures\Tech Proposal Plans\S-138_Goucher Cr _TITLE_SHT.dgn
10/19/2022

PlngngProfile.dgn

BRIDGE PLANS ID	SHEET NO.
P041151-B01	2

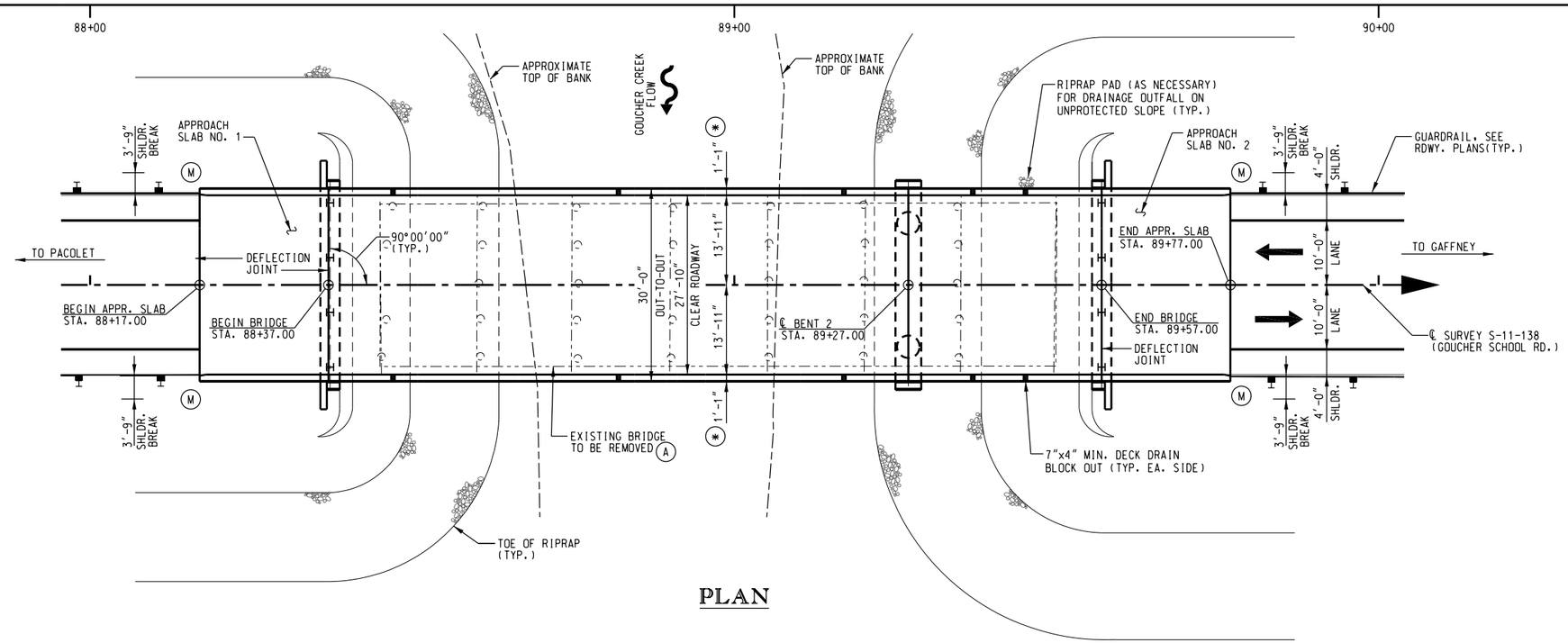

PLAN

NOTES:

BRIDGE END DRAINAGE NOT SHOWN. SEE ROADWAY PLANS.

(A) REMOVE AND DISPOSE OF EXISTING 105'-0" x 27'-6" 7-SPAN PRECAST CONC. BRIDGE AND APPURTENANCES IN ACCORDANCE WITH SECTION 202.4.2 OF THE STANDARD SPECIFICATIONS.

(*) INCLUDES 1'-0" MASH BARRIER AND 1" SLAB EXTENSION.

(M) DENOTES MTBBC3 GUARDRAIL ATTACHMENT

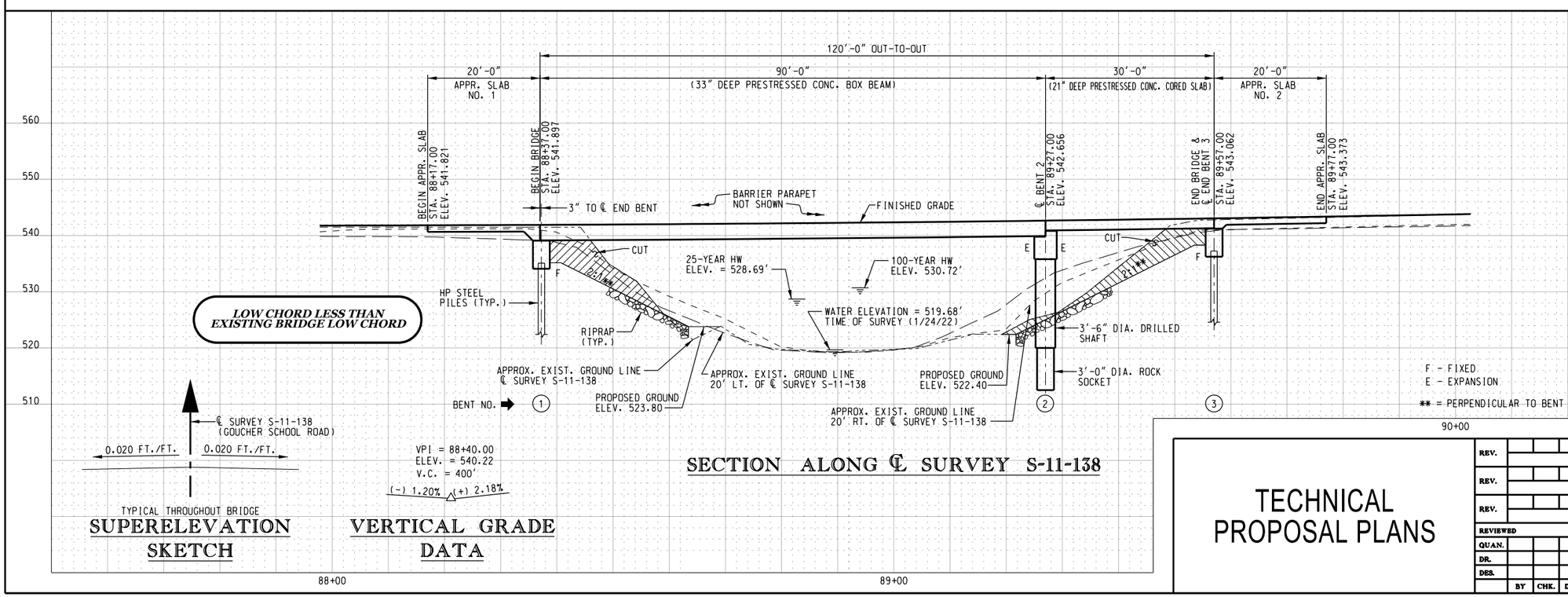

LOW CHORD LESS THAN EXISTING BRIDGE LOW CHORD

SECTION ALONG ℄ SURVEY S-11-138

HYDROLOGY DATA

DA = 10 SQ. MI.
DESIGN FLOOD: 4% AEP (25-YR.)
Q (AEP-4%) = 2,140 CFS
V (AEP-4%) = 3.9 FT./SEC.
W.S. ELEV. (AEP-4%) = 528.69 FT.
DESIGN FLOOD: 1% AEP (100-YR.)
Q (AEP-1%) = 3,020 CFS
V (AEP-1%) = 4.5 FT./SEC.
W.S. ELEV. (AEP-1%) = 530.14 FT.

BACKWATER ELEVATION UPSTREAM OF BRIDGE:
4% AEP (25-YR.) H.W. ELEV. = 528.69 FT.
(INCLUDING 0.23 FT. BACKWATER)
1% AEP (100-YR.) H.W. ELEV. = 530.72 FT.
(INCLUDING 0.30 FT. BACKWATER)

STRUCTURE OVERTOPPING FLOOD:
0.2% AEP (500-YR.) FLOW = 4,060 CFS
OVERTOPPING FLOW = GREATER THAN 0.2% AEP (500-YR.) FLOW

SUPERELEVATION SKETCH

VPI = 88+40.00
ELEV. = 540.22
V.C. = 400'
(-) 1.20% (+) 2.18%

VERTICAL GRADE DATA

TECHNICAL PROPOSAL PLANS

REV.			
REV.			
REV.			
REVIEWED			
QUAN.			
DR.			
DES.			
	BY	CHK.	DATE

lane

INFRASTRUCTURE CONSULTING & ENGINEERING

SOUTH CAROLINA DEPARTMENT OF TRANSPORTATION

BRIDGE PLAN AND PROFILE

REPLACE S-11-138 (GOUCHER SCHOOL RD.) BRIDGE OVER GOUCHER CREEK

COUNTY	ROUTE
CHEROKEE	S-11-138

DRAWING NO. 700-06

Z:\Projects\22-6\Bridge Package 14\S-138 over Goucher Creek\Structures\Tech Proposal Plans\S-138_Goucher Cr_PLAN_PROFILE.dgn
10/19/2022

BRIDGE PLANS ID	SHEET NO.
P041151-B01	3

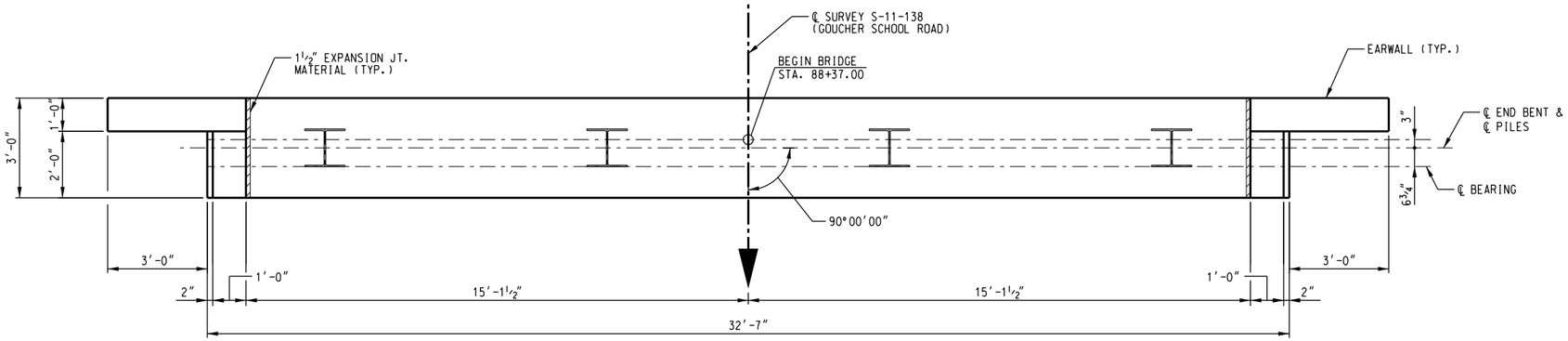

END BENT 1 PLAN

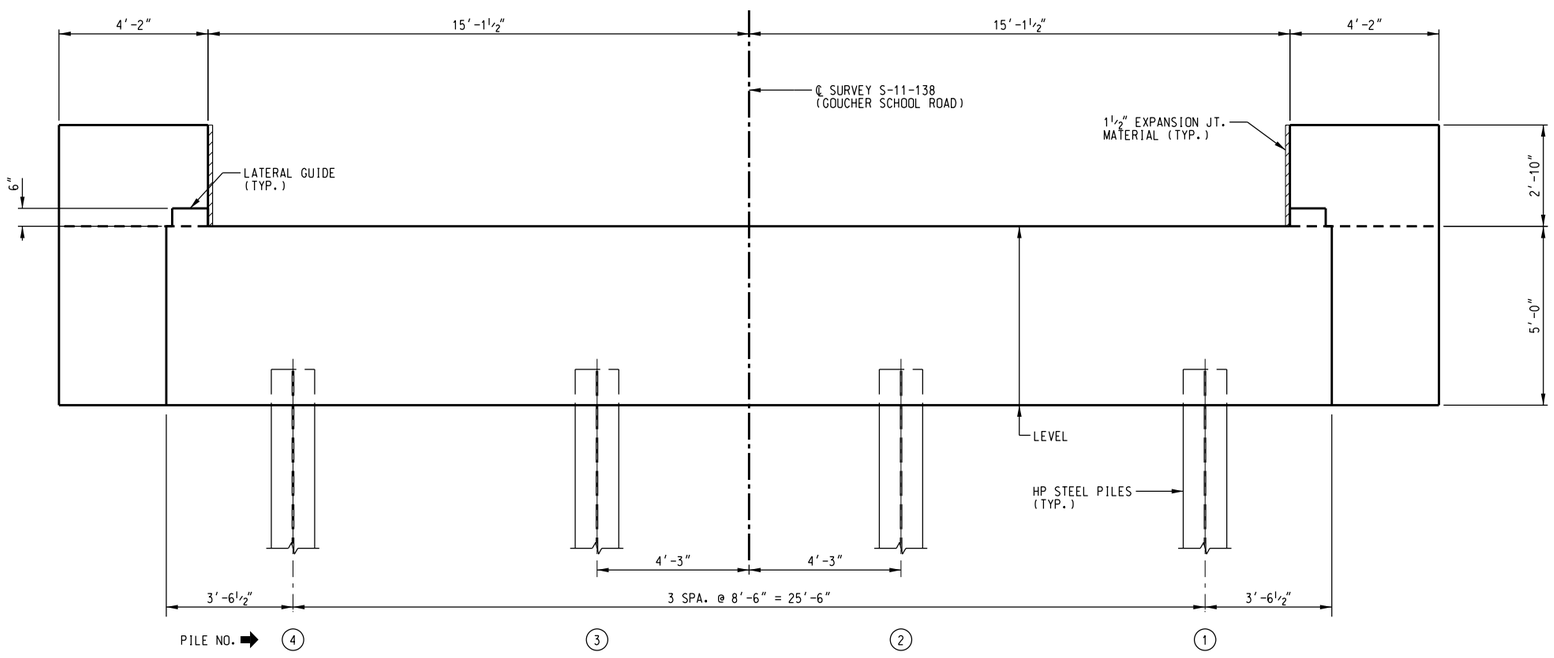

END BENT 1 ELEVATION

(LOOKING BACK ON STATIONING)

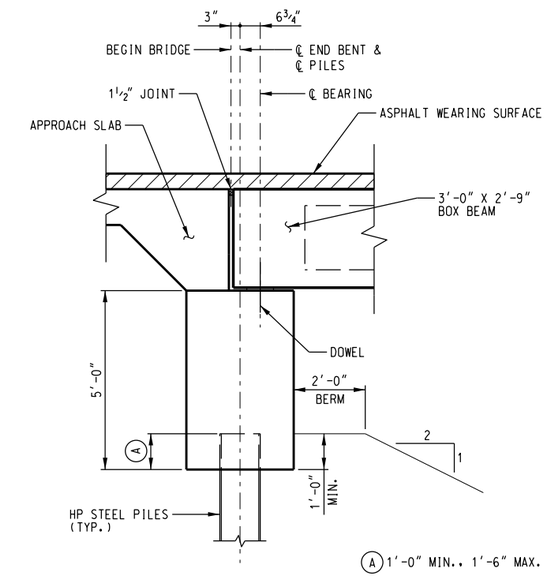

END BENT 1 SECTION

END BENT DEPTH INCREASED (5'-0" vs. 3'-6") TO AVOID STREAM IMPACTS OR LENGTHENED BRIDGE

TECHNICAL PROPOSAL PLANS

REV.			
REV.			
REV.			
REVIEWED			
QUAN.			
DR.			
DES.			
	BY	CHK.	DATE

lane

INFRASTRUCTURE CONSULTING & ENGINEERING

SOUTH CAROLINA DEPARTMENT OF TRANSPORTATION

END BENT DETAILS (1)

S-11-138 (GOUCHER SCHOOL ROAD) BRIDGE REPLACEMENT OVER GOUCHER CREEK

COUNTY CHEROKEE

ROUTE S-11-138

Z:\Projects\22-61Bridge Package 14\S-138 over Goucher Creek\Structures\Tech ProposalPlans\S-138_Goucher Cr_END_BENT_DETAILS_(1).dgn
10/19/2022

BRIDGE PLANS ID	SHEET NO.
P041151-B01	4

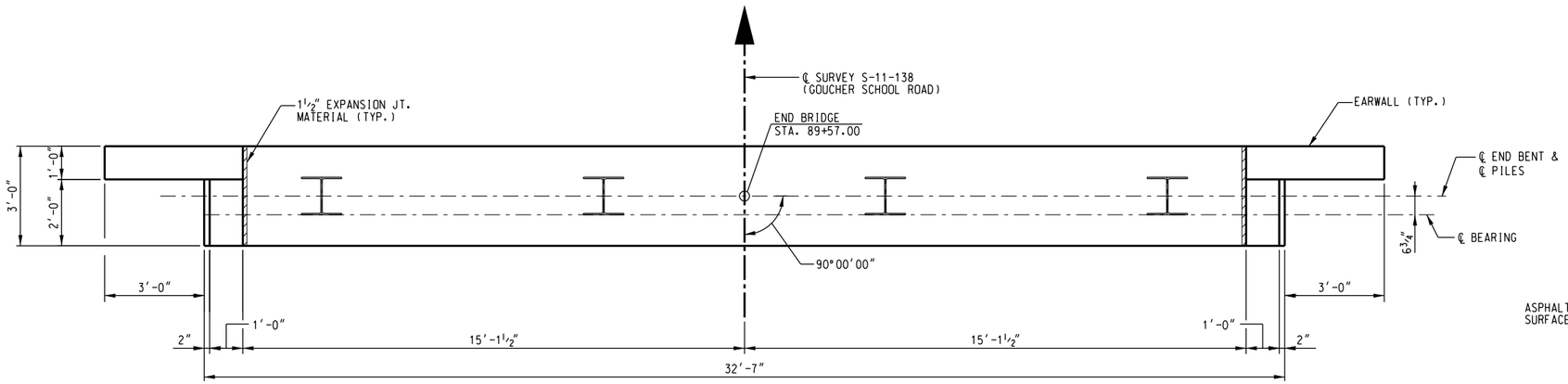

END BENT 3 PLAN

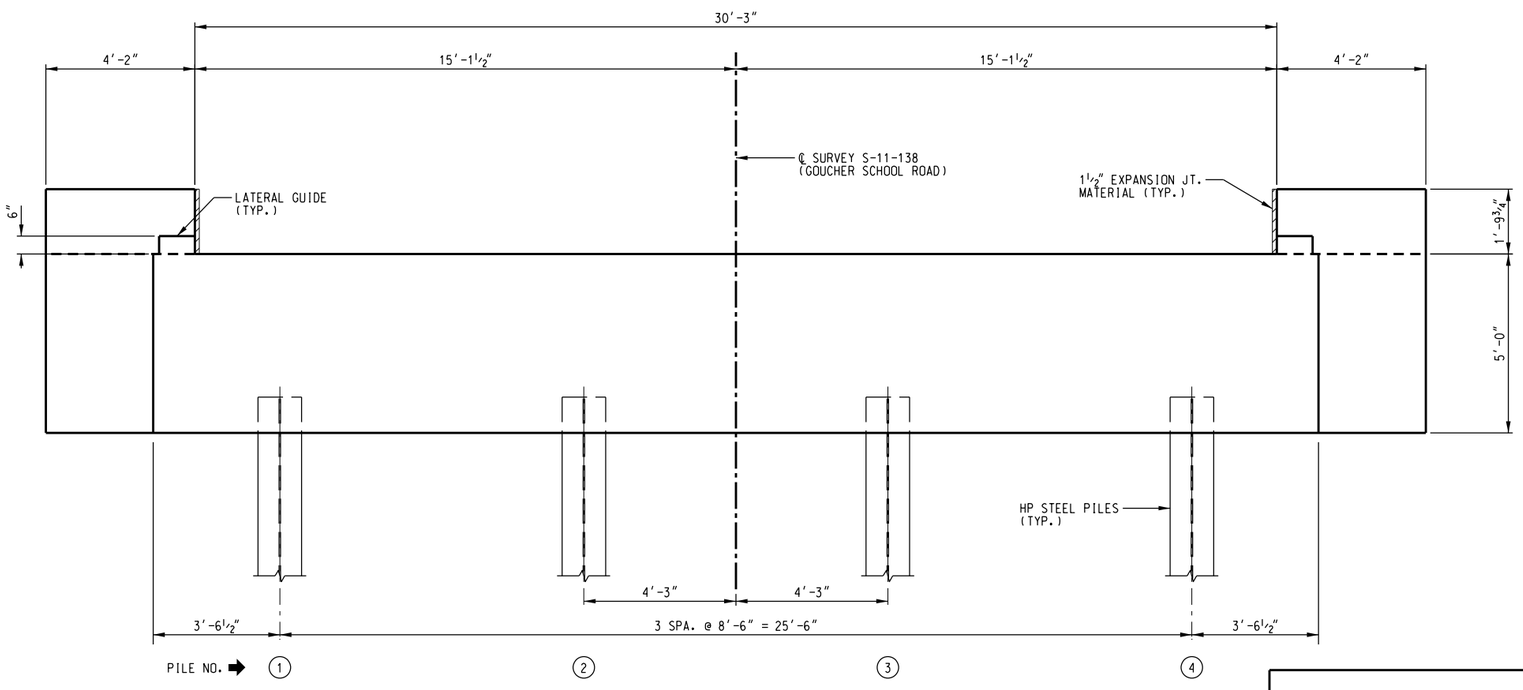

END BENT 3 ELEVATION

(LOOKING IN DIRECTION OF STATIONING)

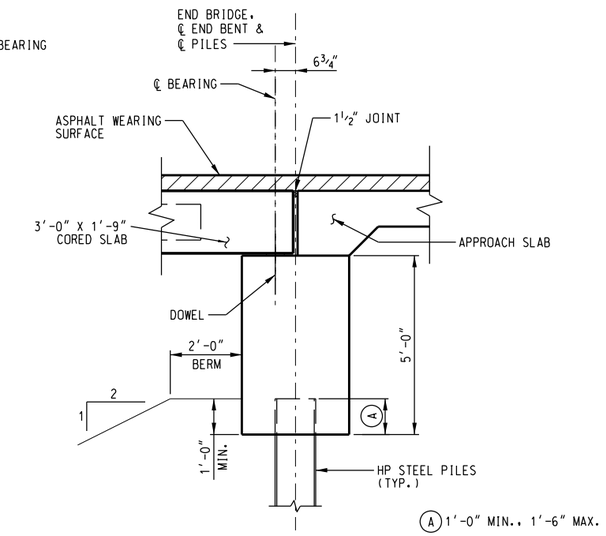

END BENT 3 SECTION

END BENT DEPTH INCREASED (5'-0" vs. 3'-6") TO AVOID STREAM IMPACTS OR LENGTHENED BRIDGE

TECHNICAL PROPOSAL PLANS

REV.			
REV.			
REV.			
REVIEWED			
QUAN.			
DR.			
DES.			
	BY	CHK.	DATE

lane

INFRASTRUCTURE CONSULTING & ENGINEERING

SOUTH CAROLINA DEPARTMENT OF TRANSPORTATION

END BENT DETAILS (2)

S-11-138 (GOUCHER SCHOOL ROAD) BRIDGE REPLACEMENT OVER GOUCHER CREEK

COUNTY: CHEROKEE

ROUTE: S-11-138

Z:\Projects\22-61Bridge Package 14\S-138 over Goucher Creek\Structures\Tech ProposalPlans\S-138_Goucher Cr_END_BENT_DETAILS_(2).dgn
10/19/2022

BRIDGE PLANS ID	SHEET NO.
P041151-B01	5

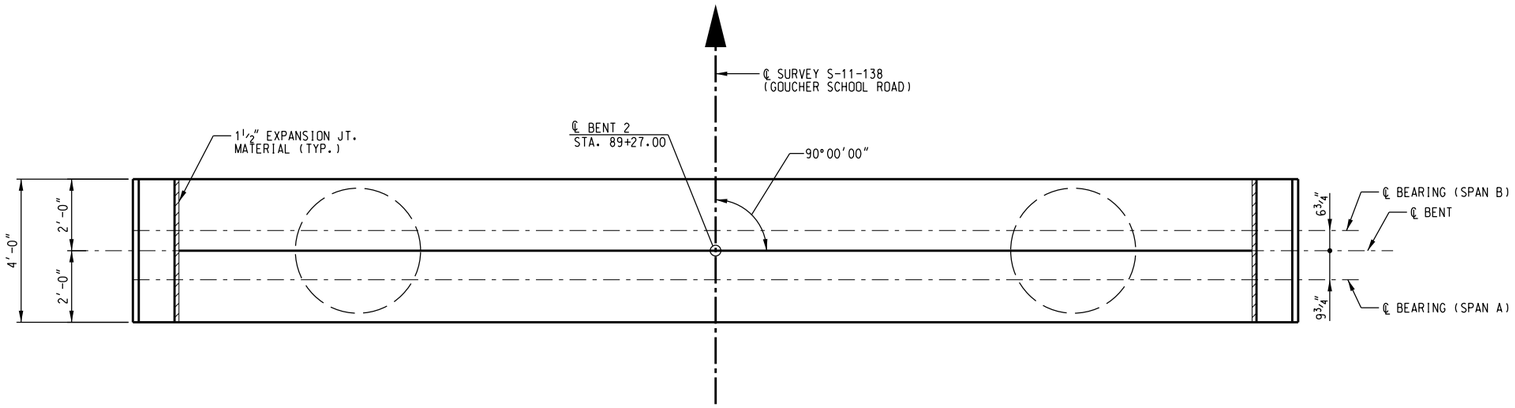

PLAN

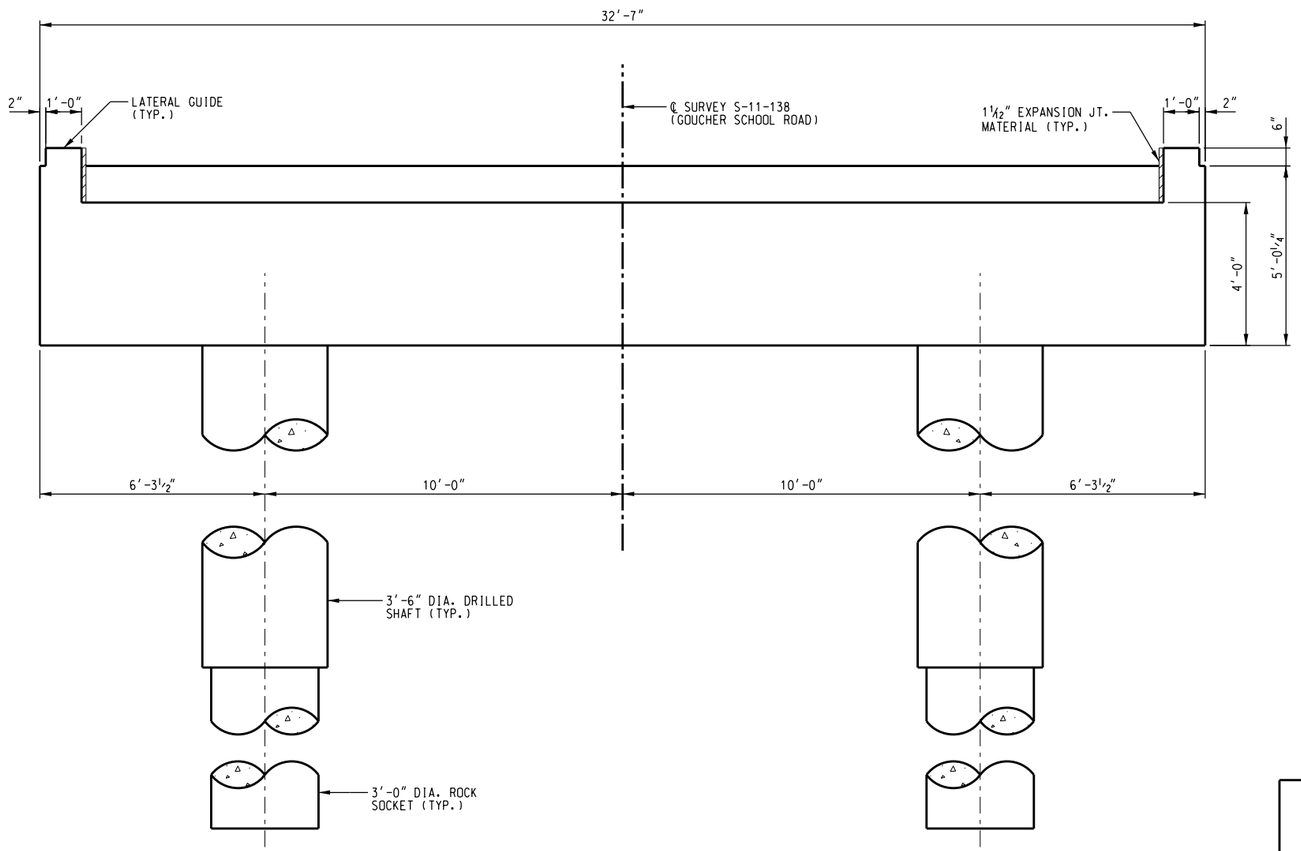

ELEVATION

(LOOKING IN DIRECTION OF STATIONING)

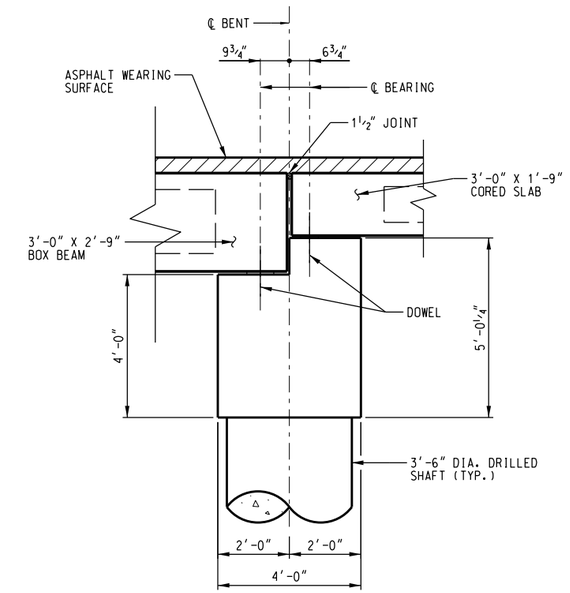

INTERIOR BENT SECTION

TECHNICAL
PROPOSAL PLANS

REV.			
REV.			
REV.			
REVIEWED			
QUAN.			
DR.			
DES.			
	BY	CHK.	DATE

lane
INFRASTRUCTURE
CONSULTING & ENGINEERING

SOUTH CAROLINA
DEPARTMENT OF TRANSPORTATION

INTERIOR BENT DETAILS

S-11-138 (GOUCHER SCHOOL ROAD) BRIDGE
REPLACEMENT OVER GOUCHER CREEK

COUNTY	ROUTE
CHEROKEE	S-11-138

Z:\Projects\22-6\Bridge Package 14\S-138 over Goucher Creek\Structures\Tech ProposalPlans\S-138_Goucher Cr_INTERIOR_BENT_DETAILS.dgn
10/19/2022

BRIDGE PLANS ID	SHEET NO.
P041151-B01	6

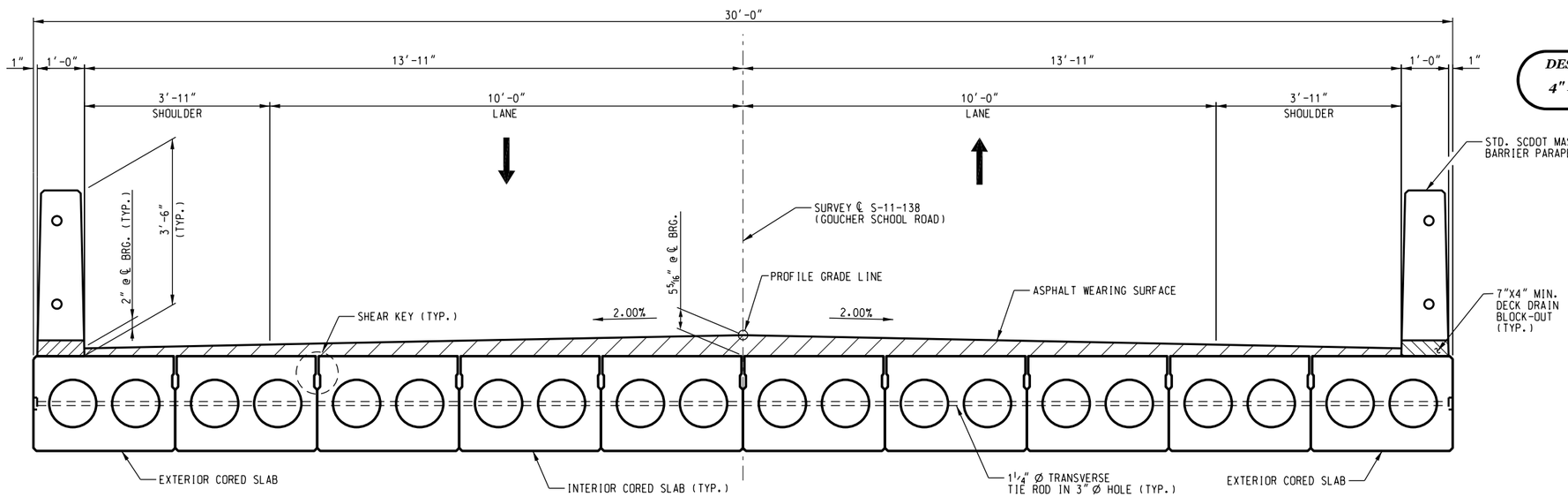

TYPICAL SECTION - 30'-0" SPAN

(LOOKING IN DIRECTION OF STATIONING)

DESIGN EXCEPTION: BLOCK-OUT IN PARAPET INSTEAD OF 4" DIA. DECK DRAIN SHOWN ON SCDOT STD. DWG. 704-29a

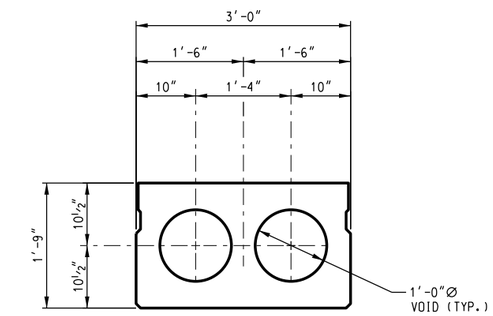

INTERIOR SLAB SECTION - CORED SLAB

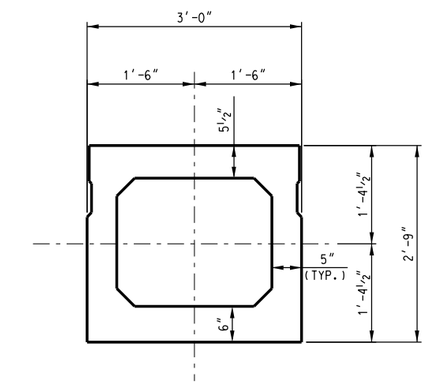

INTERIOR SLAB SECTION - BOX BEAM

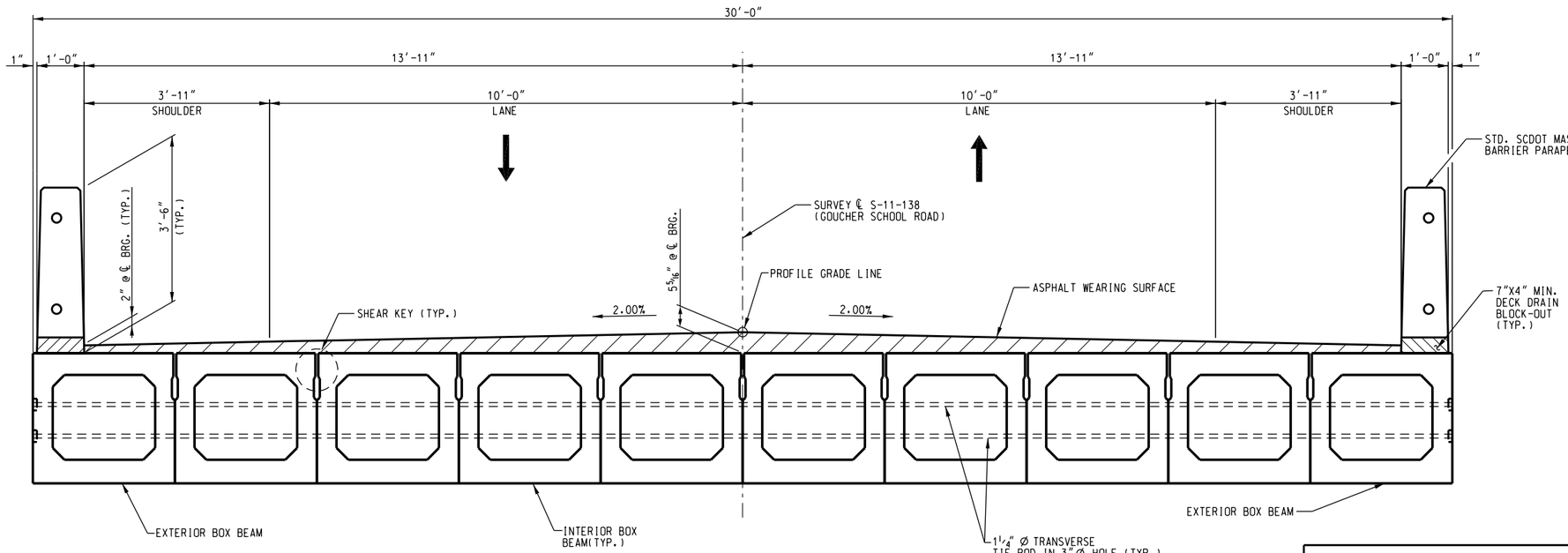

TYPICAL SECTION - 90'-0" SPAN

(LOOKING IN DIRECTION OF STATIONING)

DESIGN EXCEPTION: USE OF BOX BEAMS ARE NOT LISTED AS A PROPOSED STRUCTURE TYPE IN THE SUPPLEMENTAL DESIGN CRITERIA FOR LOW VOLUME BRIDGE REPLACEMENT PROJECTS OR THE BDM

TECHNICAL PROPOSAL PLANS

REV.			
REV.			
REV.			
REVIEWED			
QUAN.			
DR.			
DES.			
	BY	CHK.	DATE

lane INFRASTRUCTURE CONSULTING & ENGINEERING

SOUTH CAROLINA DEPARTMENT OF TRANSPORTATION

SUPERSTRUCTURE TYPICAL SECTION

S-11-138 (GOUCHER SCHOOL ROAD) BRIDGE REPLACEMENT OVER GOUCHER CREEK

COUNTY CHEROKEE | ROUTE S-11-138

Z:\Projects\22-61Bridge Package 14\S-138 over Goucher Creek\Structures\Tech Proposal Plans\S-138_Goucher Cr_TYP_SECT.dgn
10/19/2022

BRIDGE PLANS ID	SHEET NO.
P041150 - B01	1

South Carolina Department of Transportation

INDEX OF SHEETS

1. TITLE SHEET
2. BRIDGE PLAN AND PROFILE
3. END BENT DETAILS
4. SUPERSTRUCTURE TYPICAL SECTION

Design Reference for these plans is the:

LVB

Supplemental Design Criteria For
Low Volume Bridge Replacement Projects

PROPOSED PLANS FOR

CHEROKEE COUNTY
PROJECT ID P041150
STATE ROUTE S-11-226 (HAMMETT GROVE ROAD)
REPLACE BRIDGE OVER UNNAMED STREAM

Approximate Location of Bridge is

Latitude	34°56'11" N
Longitude	81°44'55" W

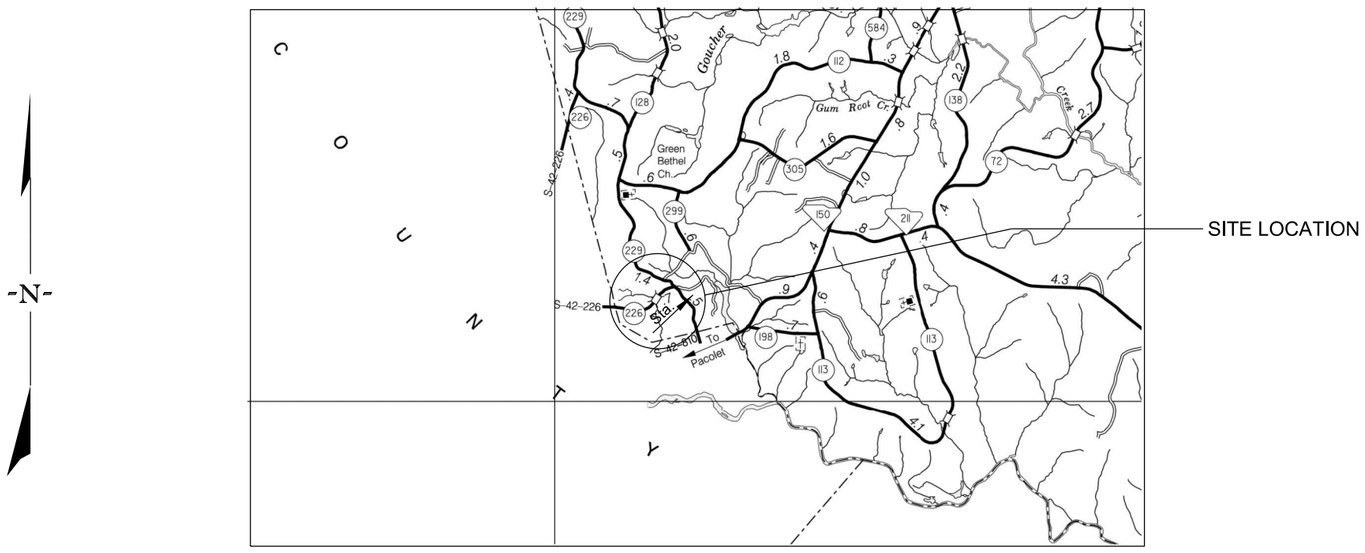

LAYOUT

3 DAYS BEFORE DIGGING IN
SOUTH CAROLINA

CALL 811

SOUTH CAROLINA 811 (SC811)
WWW.SC811.COM
ALL UTILITIES MAY NOT BE A MEMBER OF SC811

ASSET ID NOT ASSIGNED

TRAFFIC DATA

2020 ADT 200 V.P.D.

2040 ADT 256 V.P.D.

TRUCKS 5 %

NET LENGTH OF ROADWAY	0.000	MILES
NET LENGTH OF BRIDGES	0.015	MILES
NET LENGTH OF PROJECT	0.015	MILES
LENGTH OF EXCEPTIONS	0.000	MILES
GROSS LENGTH OF PROJECT	0.015	MILES

NOTE: EXCEPT AS MAY OTHERWISE BE SPECIFIED ON THE PLANS OR IN THE SPECIAL PROVISIONS, ALL MATERIALS AND WORKMANSHIP ON THIS PROJECT SHALL CONFORM TO THE SOUTH CAROLINA DEPARTMENT OF TRANSPORTATION STANDARD SPECIFICATIONS FOR HIGHWAY CONSTRUCTION (2007 EDITION) AND THE STANDARD DRAWINGS FOR ROAD CONSTRUCTION IN EFFECT AT THE TIME OF THE RELEASE OF THE FINAL RFP.

lane

INFRASTRUCTURE CONSULTING & ENGINEERING

PLANS PREPARED BY:

INFRASTRUCTURE CONSULTING & ENGINEERING

110 MIDLANDS COURT
WEST COLUMBIA, SC 29169
Telephone: (803) 822-0333

ENGINEER OF RECORD

TECHNICAL PROPOSAL PLANS

FOR CONSTRUCTION : _____ _____ DATE

REVIEWED		
DR.	JLJ	WRS
	BY	CHK

WRS 09-22 DATE

Z:\Projects\22-6\Bridge Package 14\S-226 over Unnamed Stream\Structures\Tech Proposal Plans\S-226_Unnamed Stream_TITLE_SHT.dgn
10/17/2022

BRIDGE PLANS ID	SHEET NO.
P041150-B01	2

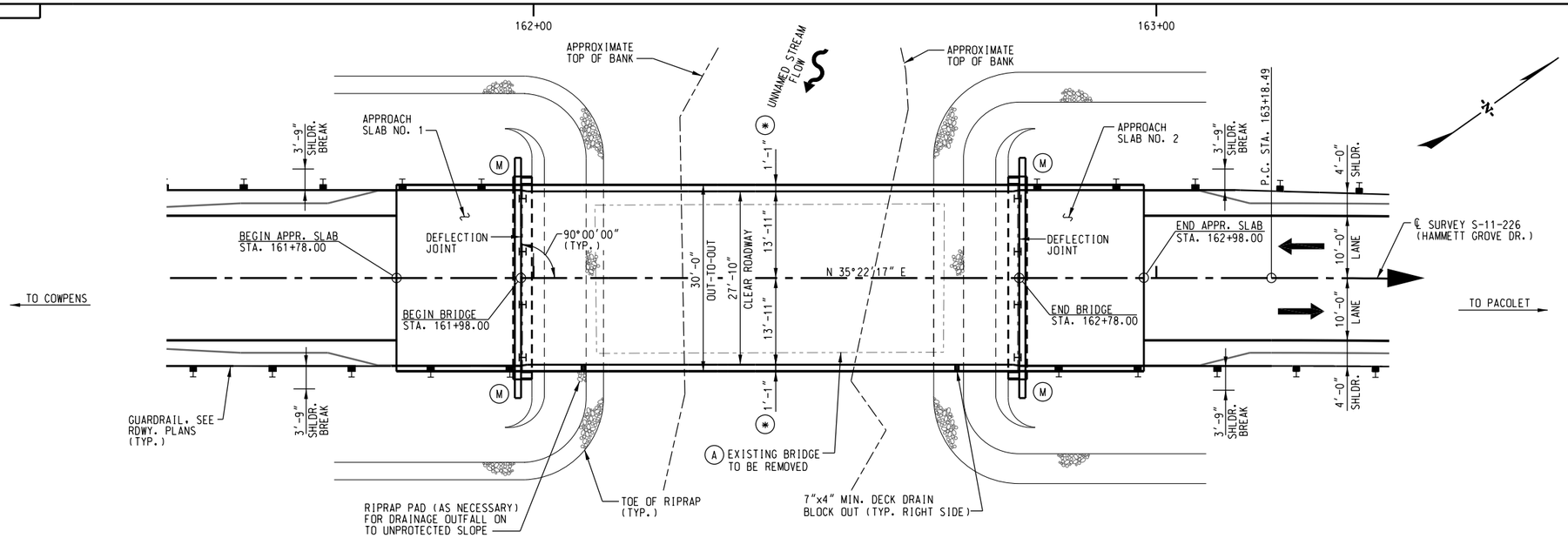

PLAN

NOTES:

BRIDGE END DRAINAGE NOT SHOWN. SEE ROADWAY PLANS.

(A) REMOVE AND DISPOSE OF EXISTING 56'-0" x 25'-6" 4-SPAN PRECAST CONCRETE BRIDGE AND APPURTENANCES IN ACCORDANCE WITH SECTION 202.4.2 OF THE STANDARD SPECIFICATIONS.

(✱) INCLUDES 1'-0" MASH BARRIER AND 1" SLAB EXTENSION.

(M) DENOTES MTBBC2 GUARDRAIL ATTACHMENT

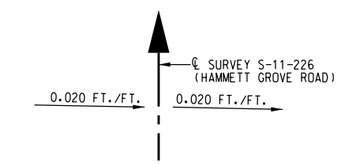

TYPICAL THROUGHOUT BRIDGE

SUPERELEVATION SKETCH

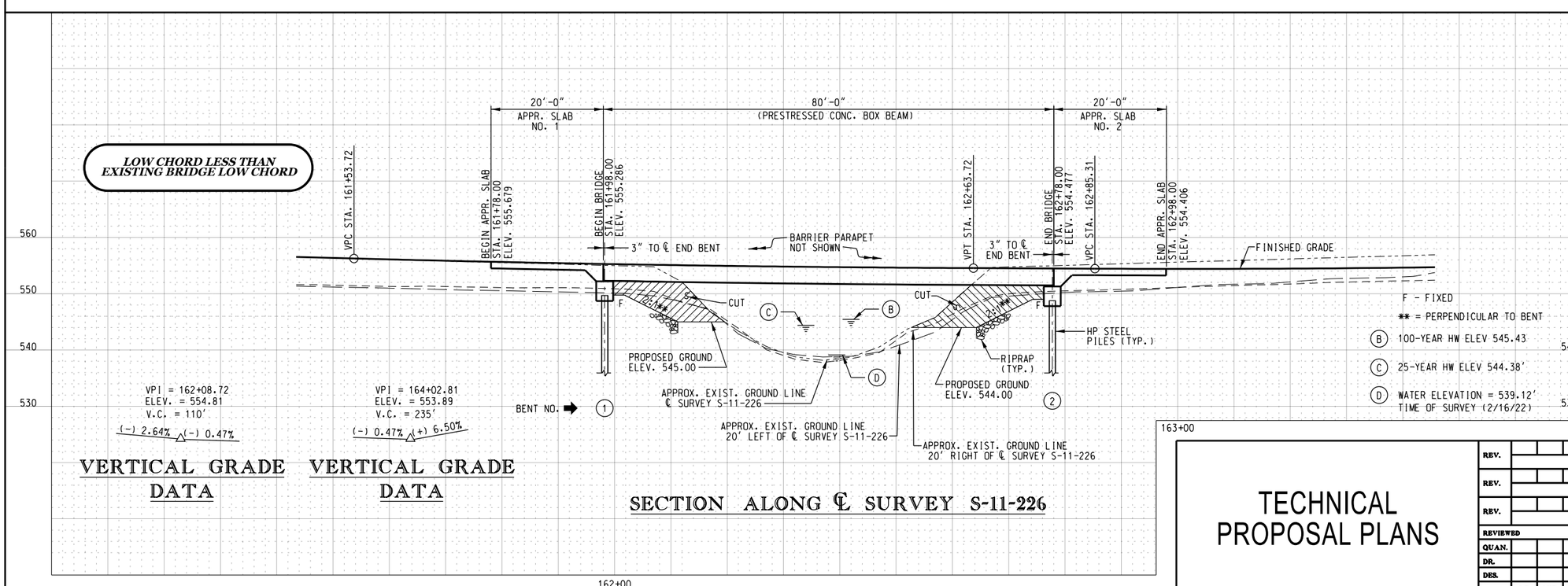

F - FIXED

✱✱ = PERPENDICULAR TO BENT

(B) 100-YEAR HW ELEV 545.43

(C) 25-YEAR HW ELEV 544.38'

(D) WATER ELEVATION = 539.12' TIME OF SURVEY (2/16/22)

HYDROLOGY DATA

DA = 1 SQ. MI.
DESIGN FLOOD: 4% AEP (25-YR.)
Q (AEP-4%) = 684 CFS
V (AEP-4%) = 6.6 FT./SEC.
W.S. ELEV. (AEP-4%) = 544.38 FT.
DESIGN FLOOD: 1% AEP (100-YR.)
Q (AEP-1%) = 984 CFS
V (AEP-1%) = 7.0 FT./SEC.
W.S. ELEV. (AEP-1%) = 545.43 FT.

BACKWATER ELEVATION UPSTREAM OF BRIDGE:
4% AEP (25-YR.) H.W. ELEV. = 544.38 FT.
(INCLUDING 0.48 FT. BACKWATER)
1% AEP (100-YR.) H.W. ELEV. = 545.43 FT.
(INCLUDING 0.71 FT. BACKWATER)

STRUCTURE OVERTOPPING FLOOD:
0.2% AEP (500-YR.) FLOW = 1.350 CFS
OVERTOPPING FLOW = GREATER THAN 0.02% AEP (500-YR.) FLOW

VPI = 162+08.72
ELEV. = 554.81
V.C. = 110'
(-) 2.64% (-) 0.47%

VERTICAL GRADE DATA

VPI = 164+02.81
ELEV. = 553.89
V.C. = 235'
(-) 0.47% (+) 6.50%

VERTICAL GRADE DATA

SECTION ALONG ℄ SURVEY S-11-226

TECHNICAL PROPOSAL PLANS

REV.			
REV.			
REV.			
REVIEWED			
QUAN.			
DR.			
DES.			
	BY	CHK.	DATE

lane

INFRASTRUCTURE CONSULTING & ENGINEERING

SOUTH CAROLINA DEPARTMENT OF TRANSPORTATION

BRIDGE PLAN AND PROFILE

REPLACE S-11-226 (HAMMETT GROVE RD.) BRIDGE OVER UNNAMED STREAM

COUNTY: CHEROKEE

ROUTE: S-11-226

DRAWING NO. 700-06

Z:\Projects\22-6\Bridge Package 14\S-226 over Unnamed Stream\Structures\Tech Proposal Plans\S-226_Unnamed Stream_PLAN_PROFILE.dgn
10/17/2022

BRIDGE PLANS ID	SHEET NO.
P041150-B01	3

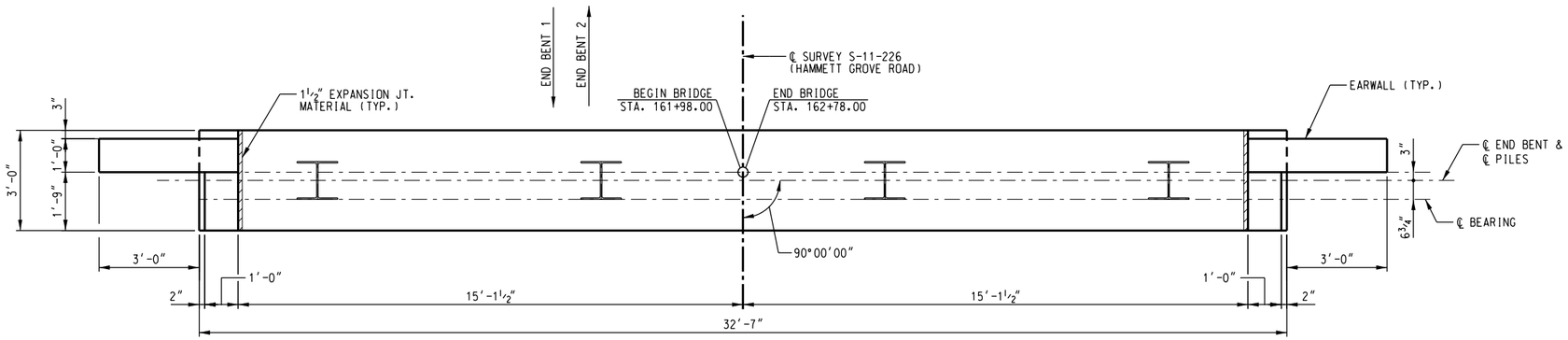

END BENT PLAN

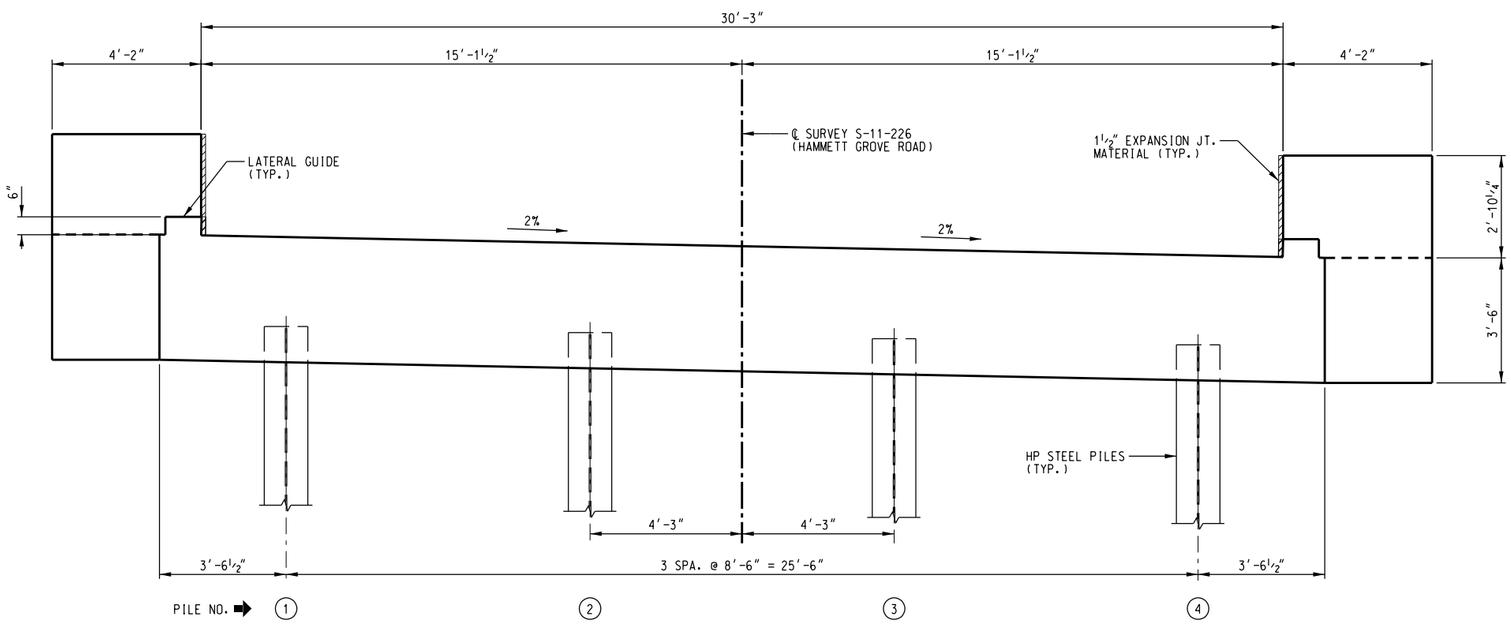

END BENT ELEVATION

(END BENT 2 SHOWN LOOKING IN DIRECTION OF STATIONING, END BENT 1 SIMILAR)

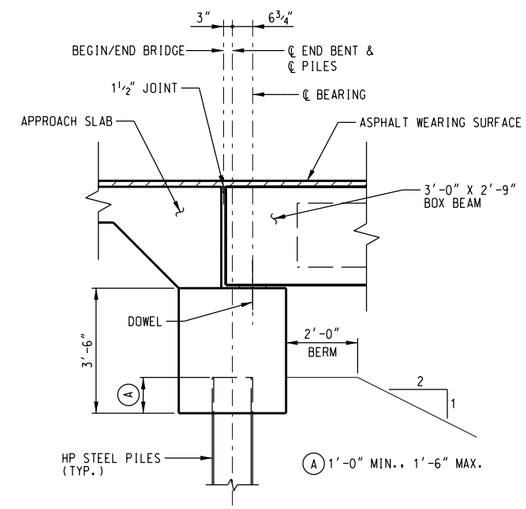

END BENT SECTION

TECHNICAL PROPOSAL PLANS

REV.			
REV.			
REV.			
REVIEWBED			
QUAN.			
DR.			
DES.			
	BY	CHK.	DATE

lane

INFRASTRUCTURE CONSULTING & ENGINEERING

SOUTH CAROLINA
DEPARTMENT OF TRANSPORTATION

END BENT DETAILS

S-11-226 (HAMMETT GROVE ROAD) BRIDGE
REPLACEMENT OVER UNNAMED STREAM

COUNTY CHEROKEE

ROUTE S-11-226

Z:\Projects\22-61Bridge Package 14\S-226 over Unnamed Stream\Structures\Tech ProposalPlans\S-226_Unnamed Stream_END_BENT_DETAILS.dgn
10/17/2022

BRIDGE PLANS ID	SHEET NO.
P041150-B01	4

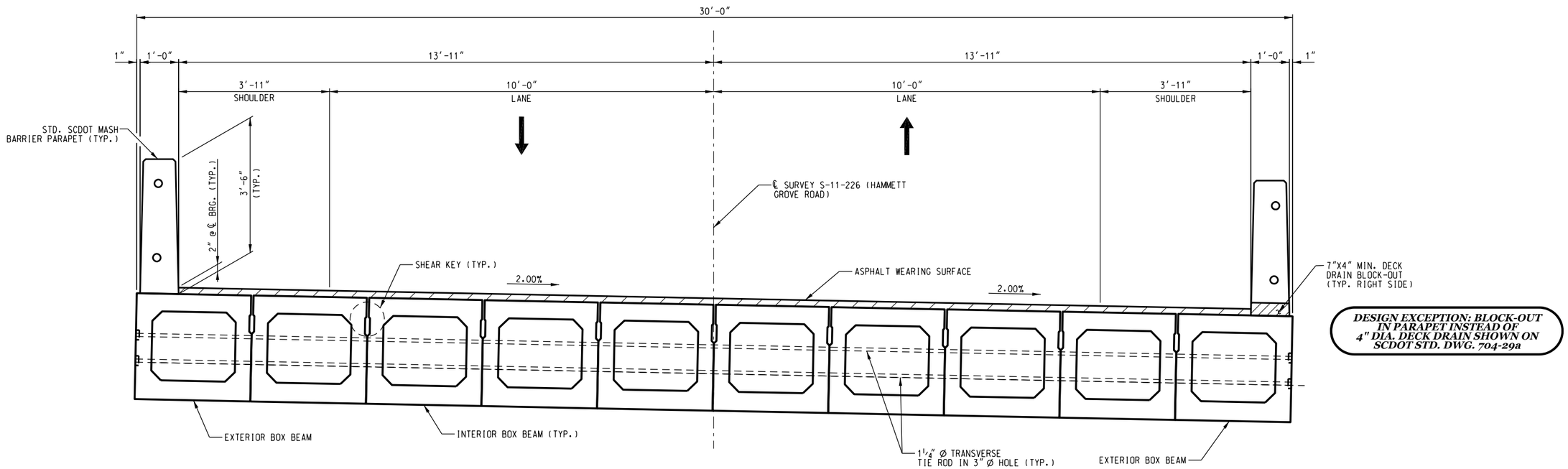

TYPICAL SECTION

(LOOKING IN DIRECTION OF STATIONING)

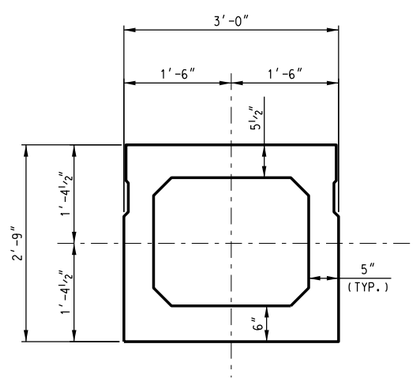

DESIGN EXCEPTION: USE OF BOX BEAMS ARE NOT LISTED AS A PROPOSED STRUCTURE TYPE IN THE SUPPLEMENTAL DESIGN CRITERIA FOR LOW VOLUME BRIDGE REPLACEMENT PROJECTS OR THE BDM

INTERIOR BOX BEAM SECTION

TECHNICAL PROPOSAL PLANS

REV.			
REV.			
REV.			
REVIEWED			
QUAN.			
DR.			
DES.			
	BY	CHK.	DATE

lane

INFRASTRUCTURE CONSULTING & ENGINEERING

SOUTH CAROLINA DEPARTMENT OF TRANSPORTATION

SUPERSTRUCTURE TYPICAL SECTION

S-11-226 (HAMMETT GROVE ROAD) BRIDGE REPLACEMENT OVER UNNAMED STREAM

COUNTY CHEROKEE

ROUTE S-11-226

Z:\Projects\22-61Bridge Package 14\S-226 over Unnamed Stream\Structures\Tech ProposalPlans\S-226_Unnamed Stream_TYP_SECT.dgn
10/17/2022

BRIDGE PLANS ID	SHEET NO.
P041152 - B01	1

South Carolina Department of Transportation

INDEX OF SHEETS

1. TITLE SHEET
2. BRIDGE PLAN AND PROFILE
3. END BENT DETAILS (1)
4. END BENT DETAILS (2)
5. INTERIOR BENT DETAILS
6. SUPERSTRUCTURE TYPICAL SECTION

Design Reference for these plans is the:

LVB

Supplemental Design Criteria For
Low Volume Bridge Replacement Projects

PROPOSED PLANS FOR

CHEROKEE COUNTY
PROJECT ID P041152
STATE ROUTE S-11-86 (ROCK HOUSE ROAD)
REPLACE BRIDGE OVER KINGS CREEK

Approximate Location of Bridge is

Latitude	35°08'44" N
Longitude	81°24'34" W

-N-

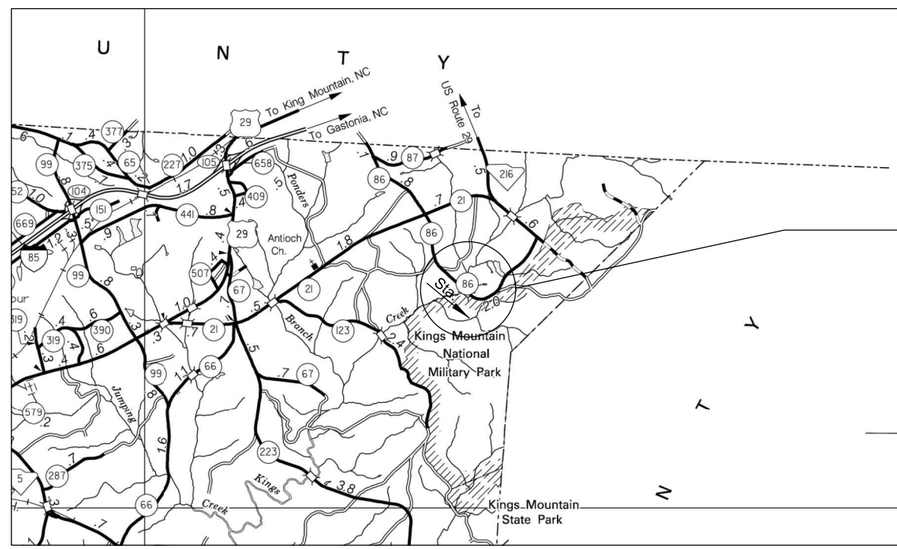

SITE LOCATION

LAYOUT

3 DAYS BEFORE DIGGING IN
SOUTH CAROLINA

CALL 811

SOUTH CAROLINA 811 (SC811)
WWW.SC811.COM
ALL UTILITIES MAY NOT BE A MEMBER OF SC811

ASSET ID NOT ASSIGNED

TRAFFIC DATA

2020 ADT 200 V.P.D.

2040 ADT 256 V.P.D.

TRUCKS 5 %

NET LENGTH OF ROADWAY	0.000	MILES
NET LENGTH OF BRIDGES	0.030	MILES
NET LENGTH OF PROJECT	0.030	MILES
LENGTH OF EXCEPTIONS	0.000	MILES
GROSS LENGTH OF PROJECT	0.030	MILES

NOTE: EXCEPT AS MAY OTHERWISE BE SPECIFIED ON THE PLANS OR IN THE SPECIAL PROVISIONS, ALL MATERIALS AND WORKMANSHIP ON THIS PROJECT SHALL CONFORM TO THE SOUTH CAROLINA DEPARTMENT OF TRANSPORTATION STANDARD SPECIFICATIONS FOR HIGHWAY CONSTRUCTION (2007 EDITION) AND THE STANDARD DRAWINGS FOR ROAD CONSTRUCTION IN EFFECT AT THE TIME OF THE RELEASE OF THE FINAL RFP.

lane

INFRASTRUCTURE CONSULTING & ENGINEERING

PLANS PREPARED BY:

INFRASTRUCTURE CONSULTING & ENGINEERING

110 MIDLANDS COURT
WEST COLUMBIA, SC 29169
Telephone: (803) 822-0333

ENGINEER OF RECORD

TECHNICAL PROPOSAL PLANS

FOR CONSTRUCTION : _____ _____ DATE

REVIEWED	WRS	
DR.	JLJ	WRS
	BY	CHK

09-22 DATE

Z:\Projects\22-6\Bridge Package 14\S-86 over Kings Creek\Structures\Tech ProposalPlans\S-86_Kings Cr_TITLE_SHT.dgn
10/17/2022

PLAN AND PROFILE

BRIDGE PLANS ID	SHEET NO.
P041152-B01	2

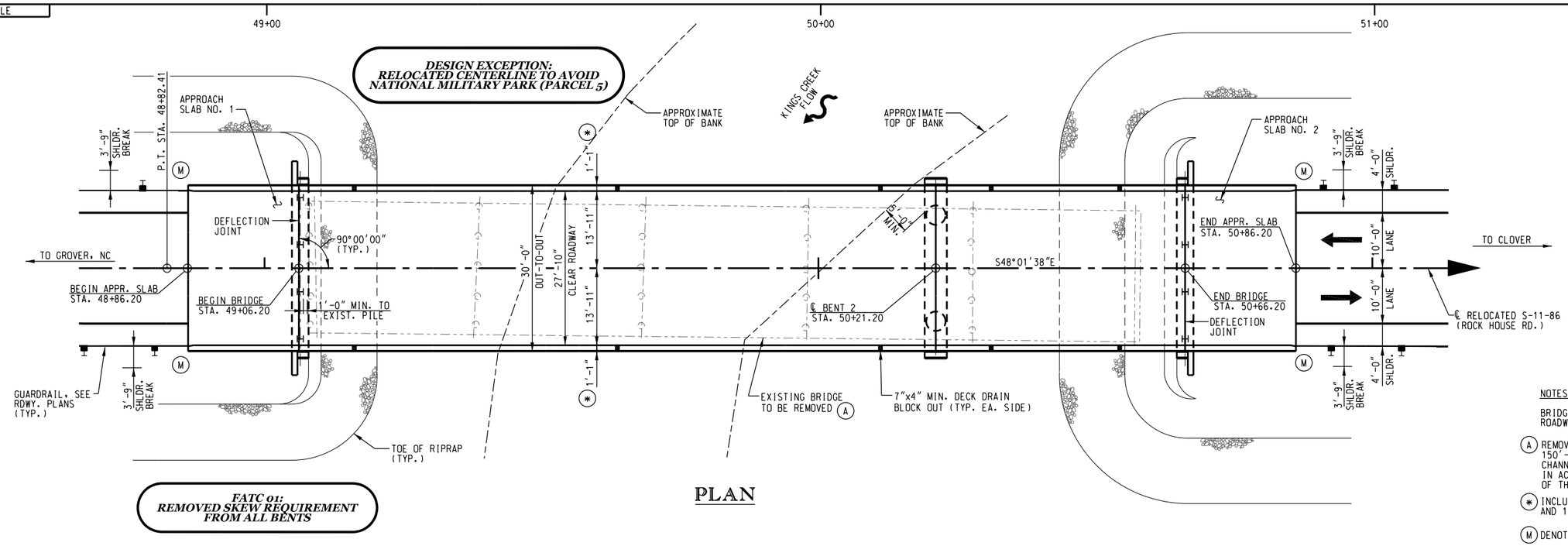

PLAN

NOTES:

BRIDGE END DRAINAGE NOT SHOWN. SEE ROADWAY PLANS.

(A) REMOVE AND DISPOSE OF EXISTING 150'-0" x 25'-6" 5-SPAN PRESTRESSED CHANNEL BRIDGE AND APPURTENANCES IN ACCORDANCE WITH SECTION 202.4.2 OF THE STANDARD SPECIFICATIONS.

(*) INCLUDES 1'-0" MASH BARRIER AND 1" SLAB EXTENSION.

(M) DENOTES MTBBC3 GUARDRAIL ATTACHMENT

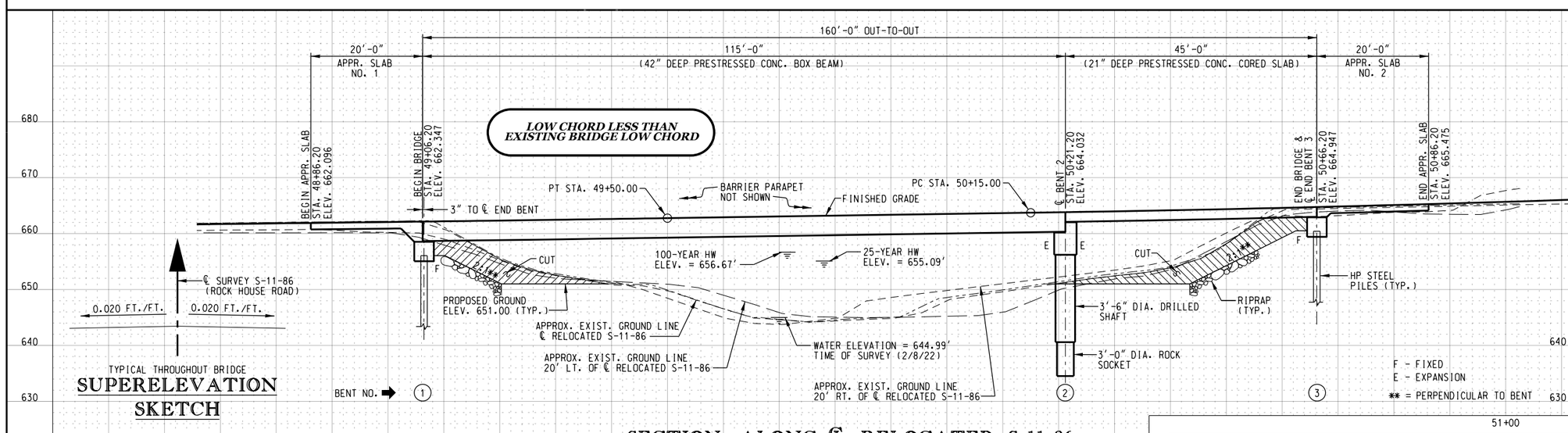

SECTION ALONG ℄ RELOCATED S-11-86

HYDROLOGY DATA

DA = 20 SQ. MI.
DESIGN FLOOD: 4% AEP (25-YR.)
Q (AEP-4%) = 3,280 CFS
V (AEP-4%) = 4.5 FT./SEC.
W.S. ELEV. (AEP-4%) = 654.88 FT.
DESIGN FLOOD: 1% AEP (100-YR.)
Q (AEP-1%) = 4,570 CFS
V (AEP-1%) = 5.0 FT./SEC.
W.S. ELEV. (AEP-1%) = 656.32 FT.

BACKWATER ELEVATION UPSTREAM OF BRIDGE:
4% AEP (25-YR.) H.W. ELEV. = 655.09 FT.
(INCLUDING 0.62 FT. BACKWATER)
1% AEP (100-YR.) H.W. ELEV. = 656.67 FT.
(INCLUDING 0.94 FT. BACKWATER)

STRUCTURE OVERTOPPING FLOOD:
0.2% AEP (500-YR.) FLOW = 6,110 CFS
OVERTOPPING FLOW = GREATER THAN 0.2% AEP (500-YR.) FLOW

TYPICAL THROUGHOUT BRIDGE
SUPERELEVATION SKETCH

VPI = 48+50.00
ELEV. = 661.460
V.C. = 200'
(+) 0.59% (+) 1.50%

VERTICAL GRADE DATA

VPI = 52+40.00
ELEV. = 667.310
V.C. = 450'
(+) 1.50% (+) 9.88%

VERTICAL GRADE DATA

TECHNICAL PROPOSAL PLANS

REV.			
REV.			
REV.			
REVIEWED			
QUAN.			
DR.			
DES.			
	BY	CHK.	DATE

lane

INFRASTRUCTURE CONSULTING & ENGINEERING

SOUTH CAROLINA DEPARTMENT OF TRANSPORTATION

BRIDGE PLAN AND PROFILE

REPLACE S-11-86 (ROCK HOUSE RD.) BRIDGE OVER KINGS CREEK

COUNTY CHEROKEE | ROUTE S-11-86

DRAWING NO. 700-06

Z:\Projects\22-61Bridge Package 14\S-86 over Kings Creek\Structures\Tech Proposal Plans\S-86_Kings Cr_PLAN_PROFILE.dgn
10/17/2022

BRIDGE PLANS ID	SHEET NO.
P041152-B01	3

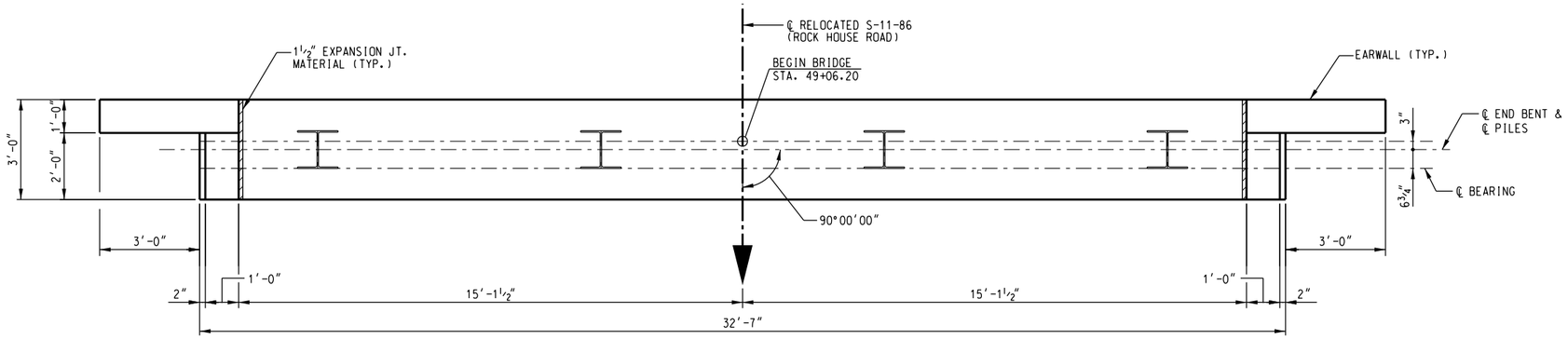

END BENT 1 PLAN

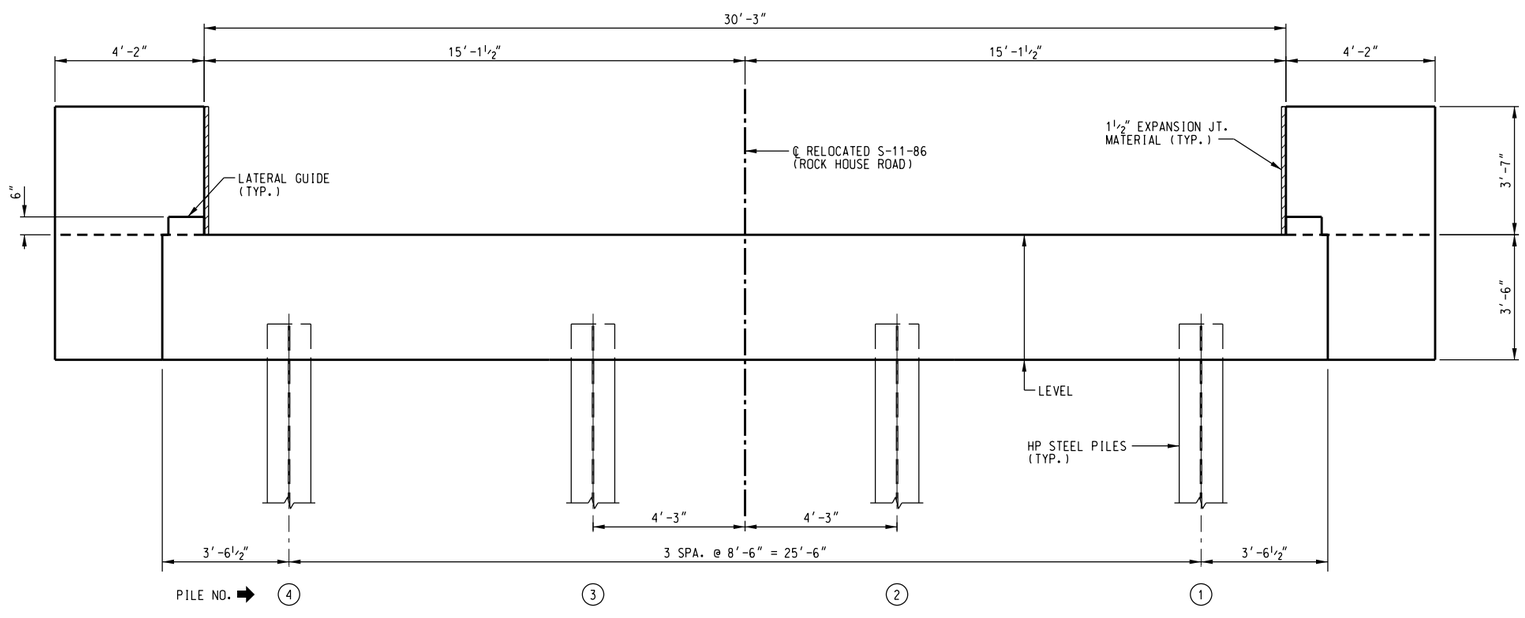

END BENT 1 ELEVATION

(LOOKING BACK ON STATIONING)

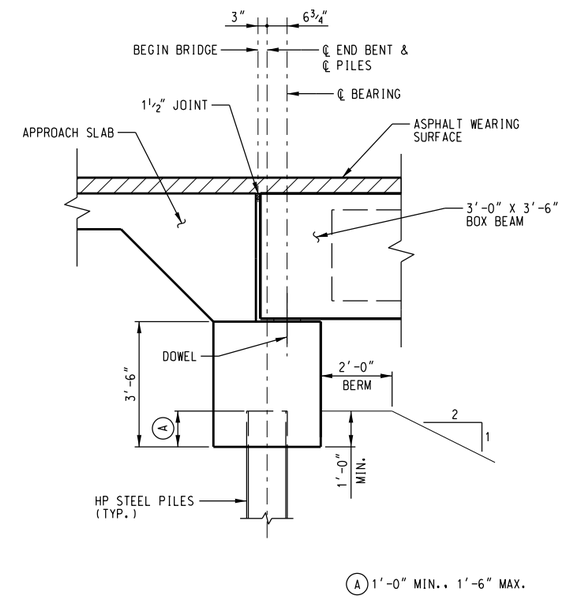

END BENT 1 SECTION

lane

INFRASTRUCTURE CONSULTING & ENGINEERING

SOUTH CAROLINA
DEPARTMENT OF TRANSPORTATION

TECHNICAL
PROPOSAL PLANS

REV.			
REV.			
REV.			
REVIEWED			
QUAN.			
DR.			
DES.			
	BY	CHK.	DATE

END BENT DETAILS (1)

S-11-86 (ROCK HOUSE ROAD)
BRIDGE REPLACEMENT OVER KINGS CREEK

COUNTY	ROUTE
CHEROKEE	S-11-86

Z:\Projects\22-61Bridge Package 14\S-86 over Kings Creek\Structures\Tech Proposal Plans\S-86_Kings Cr_END_BENT_DETAILS_(1).dgn
10/17/2022

BRIDGE PLANS ID	SHEET NO.
P041152-B01	4

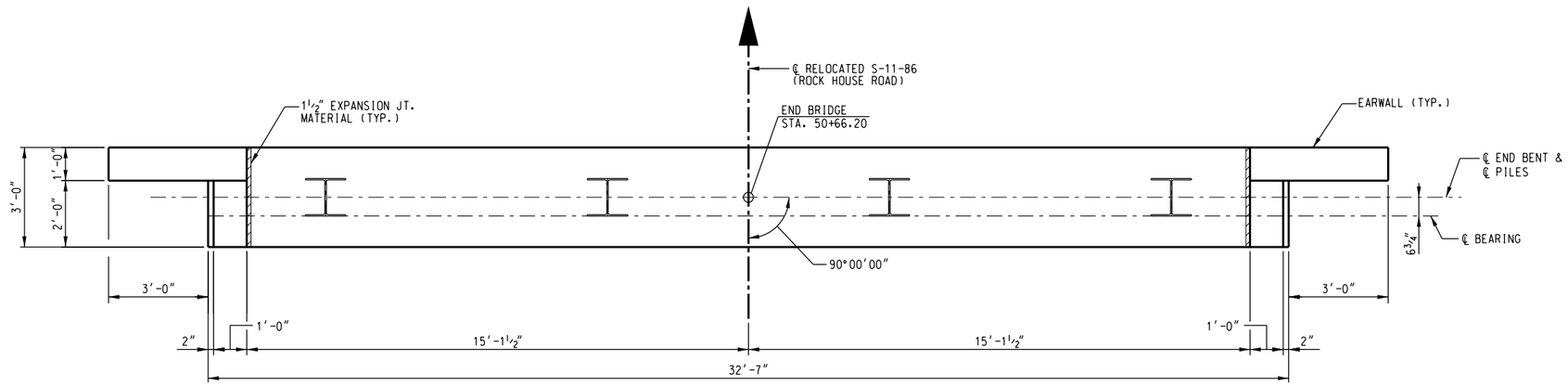

END BENT 3 PLAN

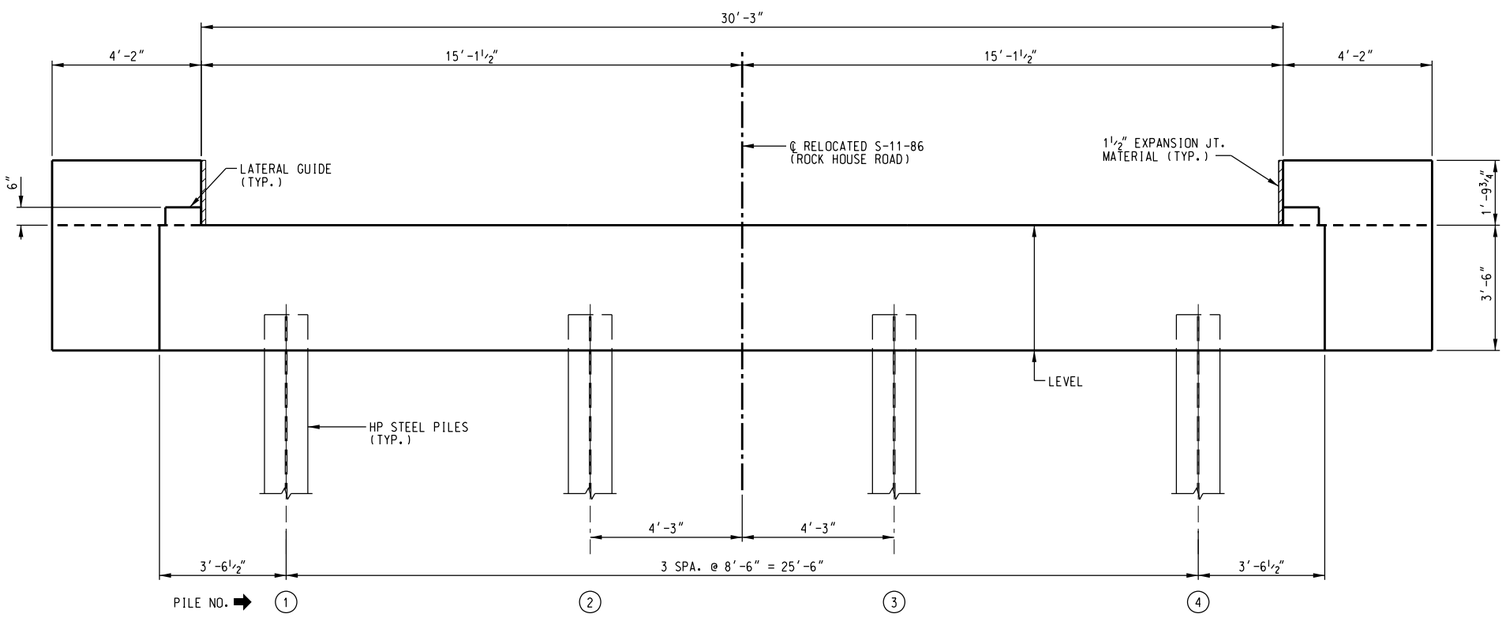

END BENT 3 ELEVATION

(LOOKING IN DIRECTION OF STATIONING)

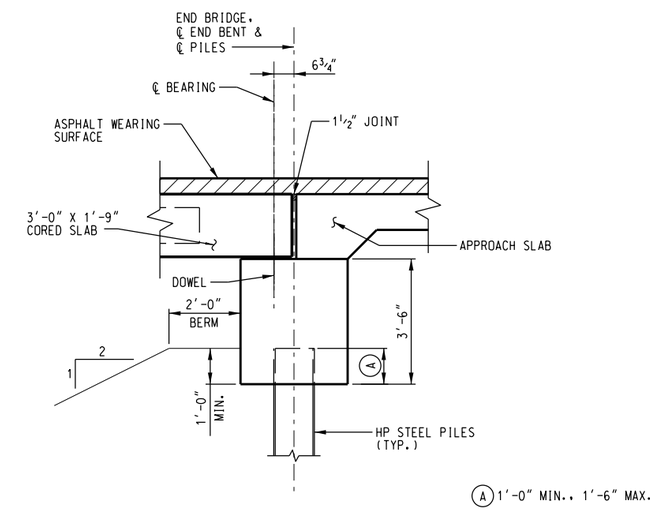

END BENT 3 SECTION

TECHNICAL
PROPOSAL PLANS

REV.			
REV.			
REV.			
REVIEWED			
QUAN.			
DR.			
DES.			
	BY	CHK.	DATE

lane

INFRASTRUCTURE
CONSULTING & ENGINEERING

SOUTH CAROLINA
DEPARTMENT OF TRANSPORTATION

END BENT DETAILS (2)

S-11-86 (ROCK HOUSE ROAD)
BRIDGE REPLACEMENT OVER KINGS CREEK

COUNTY	ROUTE
CHEROKEE	S-11-86

Z:\Projects\22-61Bridge Package 14\S-86 over Kings Creek\Structures\Tech ProposalPlans\S-86_Kings Cr_END_BENT_DETAILS_(2).dgn
10/17/2022

BRIDGE PLANS ID	SHEET NO.
P041152-B01	5

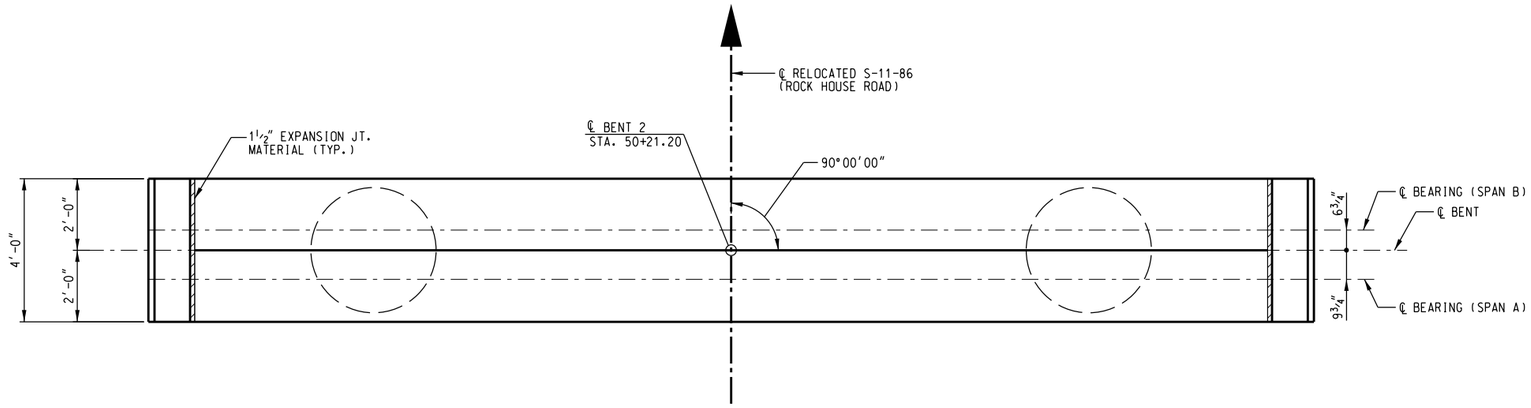

PLAN

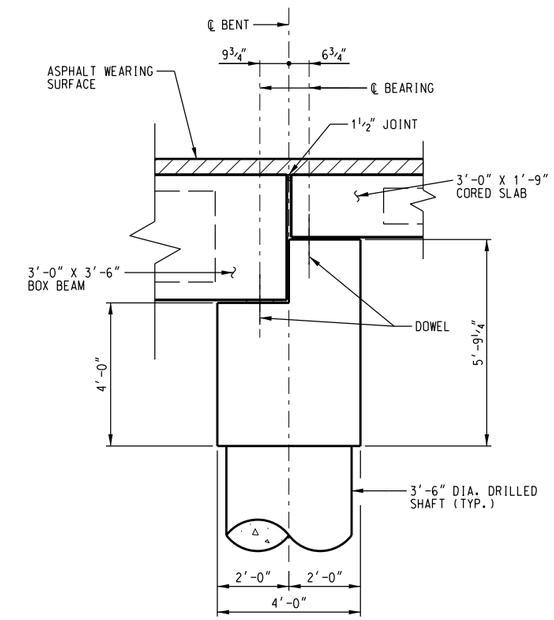

INTERIOR BENT SECTION

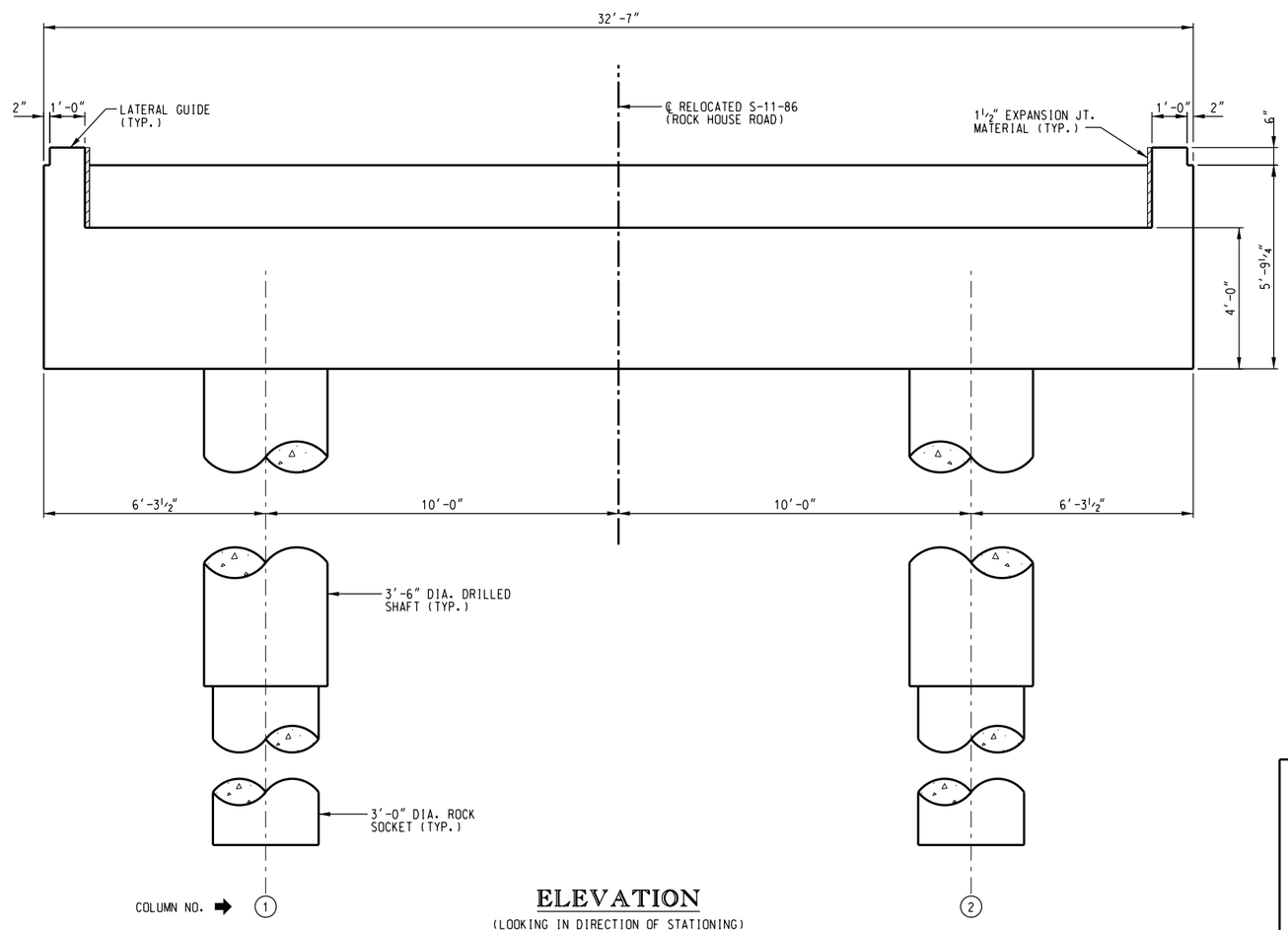

ELEVATION

(LOOKING IN DIRECTION OF STATIONING)

TECHNICAL
PROPOSAL PLANS

REV.			
REV.			
REV.			
REVIEWED			
QUAN.			
DR.			
DES.			
	BY	CHK.	DATE

lane

INFRASTRUCTURE
CONSULTING & ENGINEERING

SOUTH CAROLINA
DEPARTMENT OF TRANSPORTATION

INTERIOR BENT DETAILS

S-11-86 (ROCK HOUSE ROAD)
BRIDGE REPLACEMENT OVER KINGS CREEK

COUNTY CHEROKEE

ROUTE S-11-86

Z:\Projects\22-61 Bridge Package 14\S-86 over Kings Creek\Structures\Tech Proposal Plans\S-86_Kings Cr_INTERIOR_BENT_DETAILS.dgn
10/17/2022

BRIDGE PLANS ID	SHEET NO.
P041152-B01	6

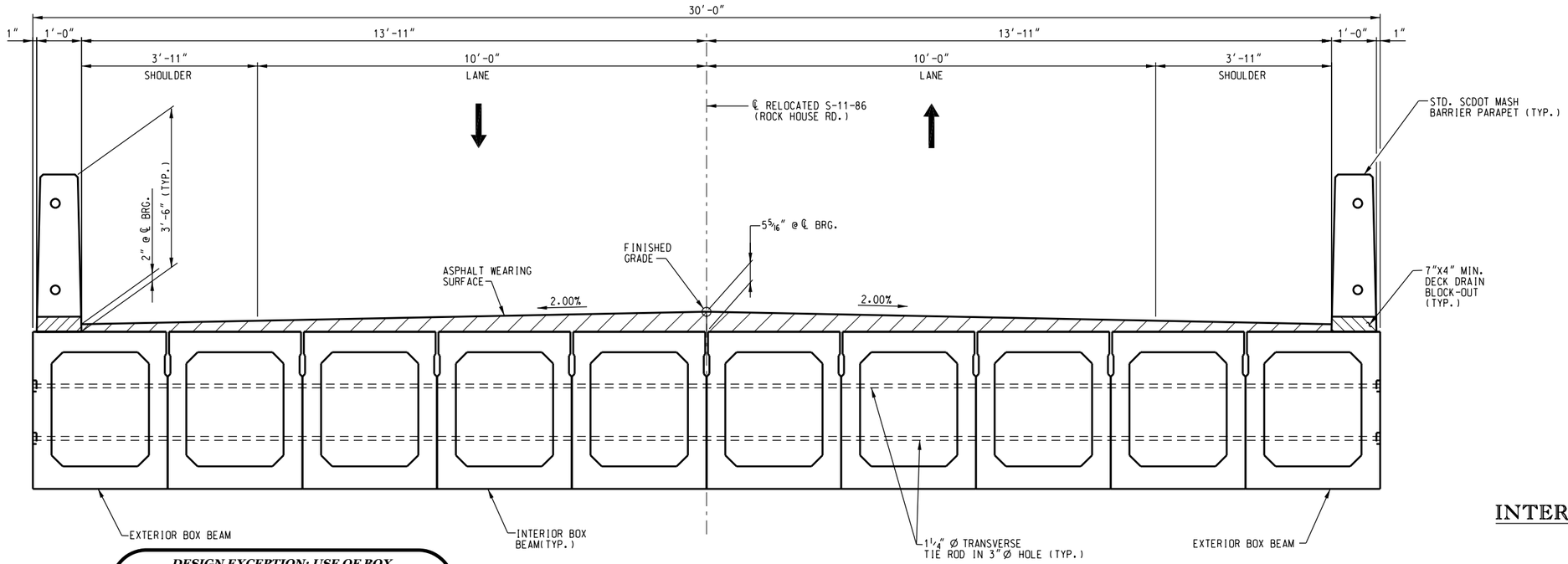

DESIGN EXCEPTION: USE OF BOX BEAMS ARE NOT LISTED AS A PROPOSED STRUCTURE TYPE IN THE SUPPLEMENTAL DESIGN CRITERIA FOR LOW VOLUME BRIDGE REPLACEMENT PROJECTS OR THE BDM

TYPICAL SECTION - 115'-0" SPAN

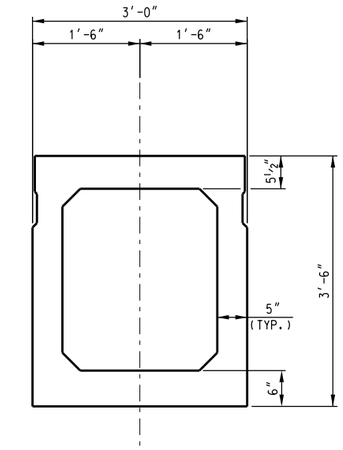

INTERIOR SLAB SECTION - BOX BEAM

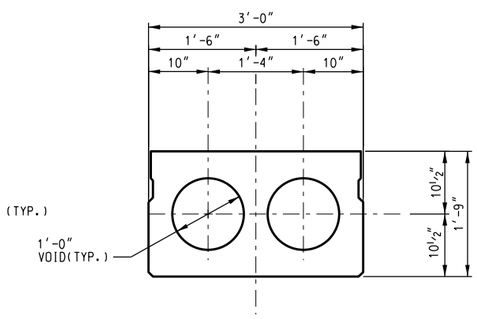

INTERIOR SLAB SECTION - CORED SLAB

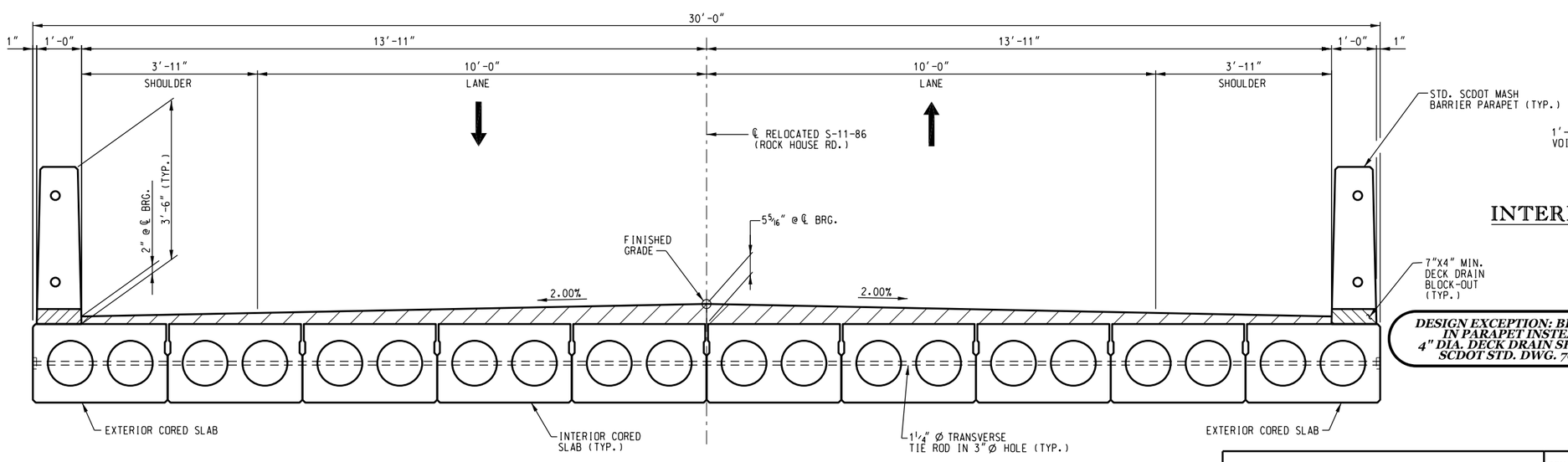

DESIGN EXCEPTION: BLOCK-OUT IN PARAPET INSTEAD OF 4" DIA. DECK DRAIN SHOWN ON SCDOT STD. DWG. 704-29a

TYPICAL SECTION - 45'-0" SPAN

TECHNICAL PROPOSAL PLANS

REV.			
REV.			
REV.			
REVIEWED			
QUAN.			
DR.			
DES.			
	BY	CHK.	DATE

lane

INFRASTRUCTURE CONSULTING & ENGINEERING

SOUTH CAROLINA
DEPARTMENT OF TRANSPORTATION

SUPERSTRUCTURE
TYPICAL SECTION

S-11-86 (ROCK HOUSE ROAD)
BRIDGE REPLACEMENT OVER KINGS CREEK

COUNTY: CHEROKEE
ROUTE: S-11-86

Z:\Projects\22-6\Bridge Package 14\S-86 over Kings Creek\Structures\Tech ProposalPlans\S-86_Kings Cr_TYP_SECT.dgn
10/17/2022

BRIDGE PLANS ID	SHEET NO.
P041149 - B01	1

South Carolina Department of Transportation

INDEX OF SHEETS

1. TITLE SHEET
2. BRIDGE PLAN AND PROFILE
3. END BENT DETAILS
4. SUPERSTRUCTURE TYPICAL SECTION

Design Reference for these plans is the:

LVB

Supplemental Design Criteria For
Low Volume Bridge Replacement Projects

PROPOSED PLANS FOR

CHEROKEE COUNTY
PROJECT ID P041149
STATE ROUTE S-11-106 (ISLAND CREEK ROAD)
REPLACE BRIDGE OVER BRANCH OF SUCK CREEK

Approximate Location of Bridge is

Latitude	35°07'22" N
Longitude	81°50'02" W

-N-

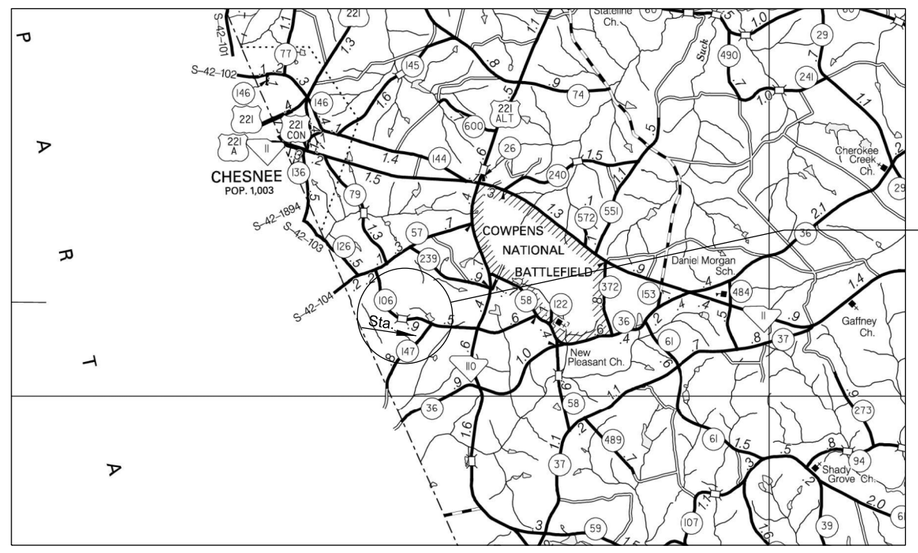

LAYOUT

3 DAYS BEFORE DIGGING IN
SOUTH CAROLINA

CALL 811

SOUTH CAROLINA 811 (SC811)
WWW.SC811.COM
ALL UTILITIES MAY NOT BE A MEMBER OF SC811

ASSET ID NOT ASSIGNED

TRAFFIC DATA

2020 ADT 225 V.P.D.

2040 ADT 329 V.P.D.

TRUCKS 8 %

NET LENGTH OF ROADWAY	0.000	MILES
NET LENGTH OF BRIDGES	0.011	MILES
NET LENGTH OF PROJECT	0.011	MILES
LENGTH OF EXCEPTIONS	0.000	MILES
GROSS LENGTH OF PROJECT	0.011	MILES

NOTE: EXCEPT AS MAY OTHERWISE BE SPECIFIED ON THE PLANS OR IN THE SPECIAL PROVISIONS, ALL MATERIALS AND WORKMANSHIP ON THIS PROJECT SHALL CONFORM TO THE SOUTH CAROLINA DEPARTMENT OF TRANSPORTATION STANDARD SPECIFICATIONS FOR HIGHWAY CONSTRUCTION (2007 EDITION) AND THE STANDARD DRAWINGS FOR ROAD CONSTRUCTION IN EFFECT AT THE TIME OF THE RELEASE OF THE FINAL RFP.

lane

INFRASTRUCTURE CONSULTING & ENGINEERING

PLANS PREPARED BY:

INFRASTRUCTURE CONSULTING & ENGINEERING

110 MIDLANDS COURT
WEST COLUMBIA, SC 29169
Telephone: (803) 822-0333

ENGINEER OF RECORD

TECHNICAL PROPOSAL PLANS

FOR CONSTRUCTION : _____ _____ DATE

REVIEWED		
DR.	JLJ	WRS
BY	CHK	DATE

Z:\Projects\22-61Bridge Package 14\S-106 over Suck Creek\Structures\Tech Proposal Plans\S-106_Suck Cr _TITLE_SHT.dgn
10/17/2022

BRIDGE PLANS ID	SHEET NO.
P041149-B01	2

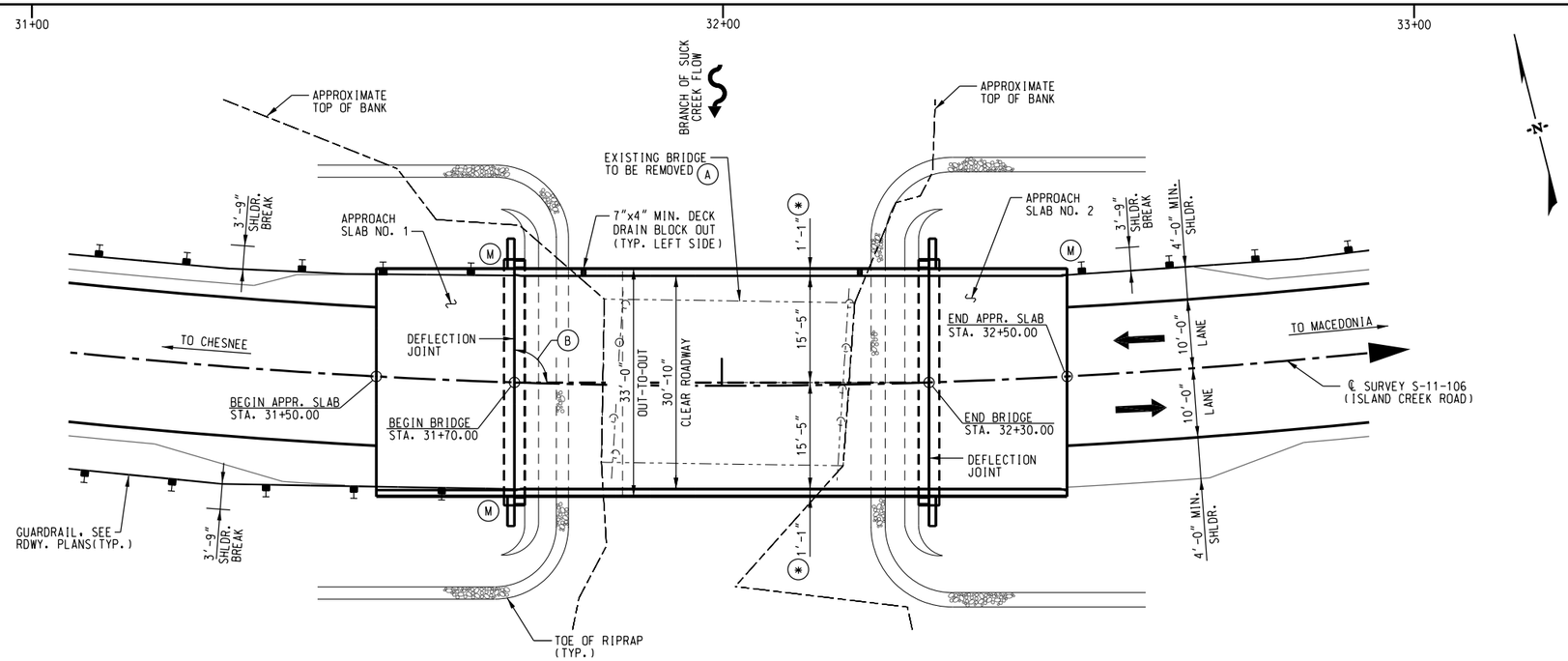

PLAN

NOTES:

BRIDGE END DRAINAGE NOT SHOWN. SEE ROADWAY PLANS.

(A) REMOVE AND DISPOSE OF EXISTING 35'-0" x 25'-0" + SINGLE SPAN STEEL BRIDGE AND APPURTENANCES IN ACCORDANCE WITH SECTION 202.4.2 OF THE STANDARD SPECIFICATIONS. REMOVE AND DISPOSE OF EXISTING ABUTMENT WALL DOWN TO NORMAL WATER ELEVATION LEAVING THE BOTTOM PORTION OF WALL IN PLACE DURING CONSTRUCTION. TO AVOID ENVIRONMENTAL IMPACTS TO THE CREEK.

(B) 91°51'29.7" TO LOCAL TANGENT (TYP.)

(✱) INCLUDES 1'-0" MASH BARRIER AND 1" SLAB EXTENSION.

(M) DENOTES MTBBC2 GUARDRAIL ATTACHMENT

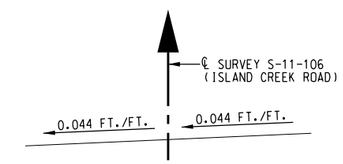

TYPICAL THROUGHOUT BRIDGE

SUPERELEVATION SKETCH

HYDROLOGY DATA

DA = 1 SQ. MI.
DESIGN FLOOD: 4% AEP (25-YR.)
Q (AEP-4%) = 478 CFS
V (AEP-4%) = 5.0 FT./SEC.
W.S. ELEV. (AEP-4%) = 844.13 FT.
DESIGN FLOOD: 1% AEP (100-YR.)
Q (AEP-1%) = 658 CFS
V (AEP-1%) = 5.1 FT./SEC.
W.S. ELEV. (AEP-1%) = 844.89 FT.

BACKWATER ELEVATION UPSTREAM OF BRIDGE:
4% AEP (25-YR.) H.W. ELEV. = 844.13 FT.
(INCLUDING 0.41 FT. BACKWATER)
1% AEP (100-YR.) H.W. ELEV. = 844.89 FT.
(INCLUDING 0.42 FT. BACKWATER)

STRUCTURE OVERTOPPING FLOOD:
0.2% AEP (100-YR.) FLOW = 941 CFS
OVERTOPPING FLOW = GREATER THAN 0.2% AEP (500-YR.) FLOW

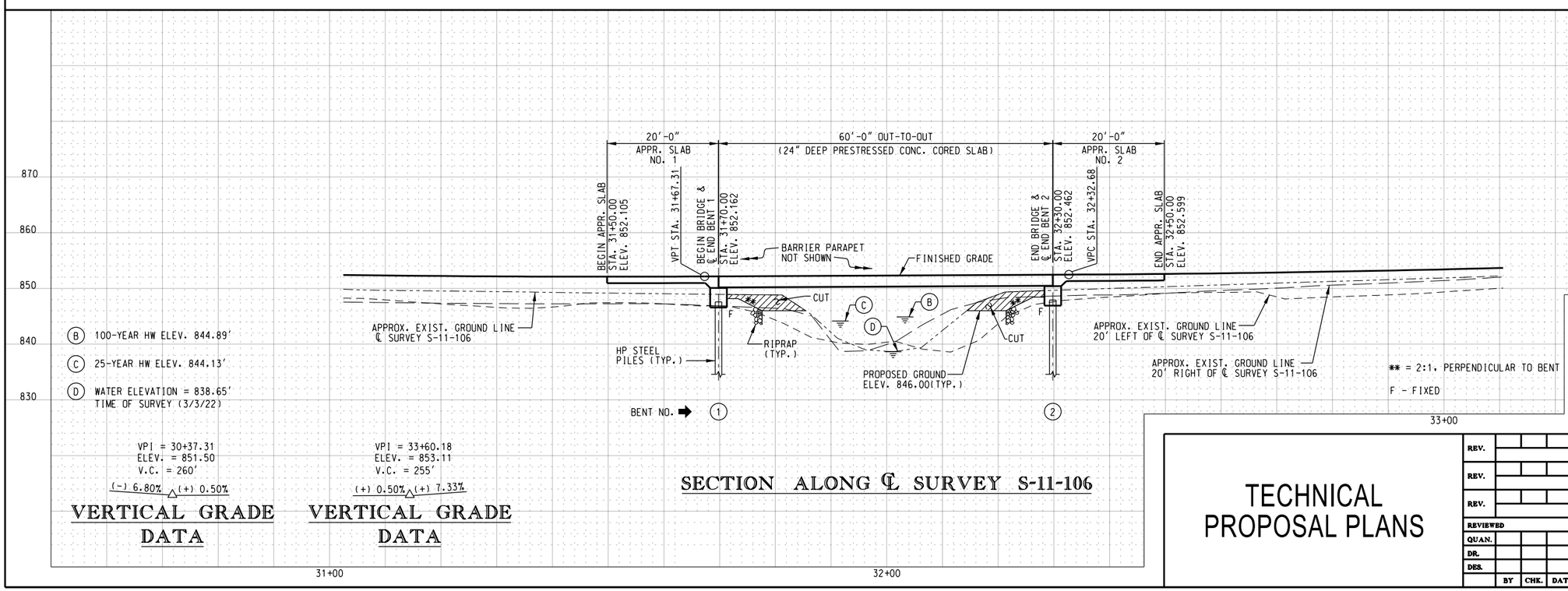

(B) 100-YEAR HW ELEV. 844.89'

(C) 25-YEAR HW ELEV. 844.13'

(D) WATER ELEVATION = 838.65' TIME OF SURVEY (3/3/22)

✱✱ = 2:1, PERPENDICULAR TO BENT

F - FIXED

SECTION ALONG ℄ SURVEY S-11-106

VPI = 30+37.31
ELEV. = 851.50
V.C. = 260'
(-) 6.80% (+) 0.50%

VERTICAL GRADE DATA

VPI = 33+60.18
ELEV. = 853.11
V.C. = 255'
(+) 0.50% (+) 7.33%

VERTICAL GRADE DATA

TECHNICAL PROPOSAL PLANS

REV.			
REV.			
REV.			
REVIEWED			
QUAN.			
DR.			
DES.			
	BY	CHK.	DATE

lane

INFRASTRUCTURE CONSULTING & ENGINEERING

SOUTH CAROLINA DEPARTMENT OF TRANSPORTATION

BRIDGE PLAN AND PROFILE

REPLACE S-11-106 (ISLAND CREEK RD.) BRIDGE OVER BRANCH OF SUCK CREEK

COUNTY: CHEROKEE

ROUTE: S-11-106

DRAWING NO. 700-06

Z:\Projects\22-61Bridge Package 14\S-106 over Suck Creek\Structures\Tech ProposalPlans\S-106_Suck Cr_PLAN_PROFILE.dgn
10/17/2022

BRIDGE PLANS ID	SHEET NO.
P041149-B01	3

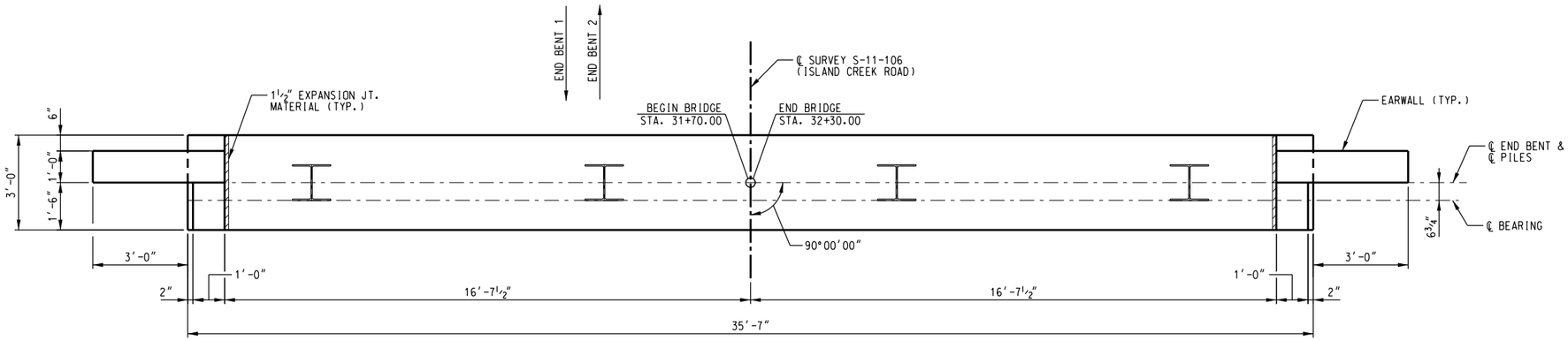

END BENT PLAN

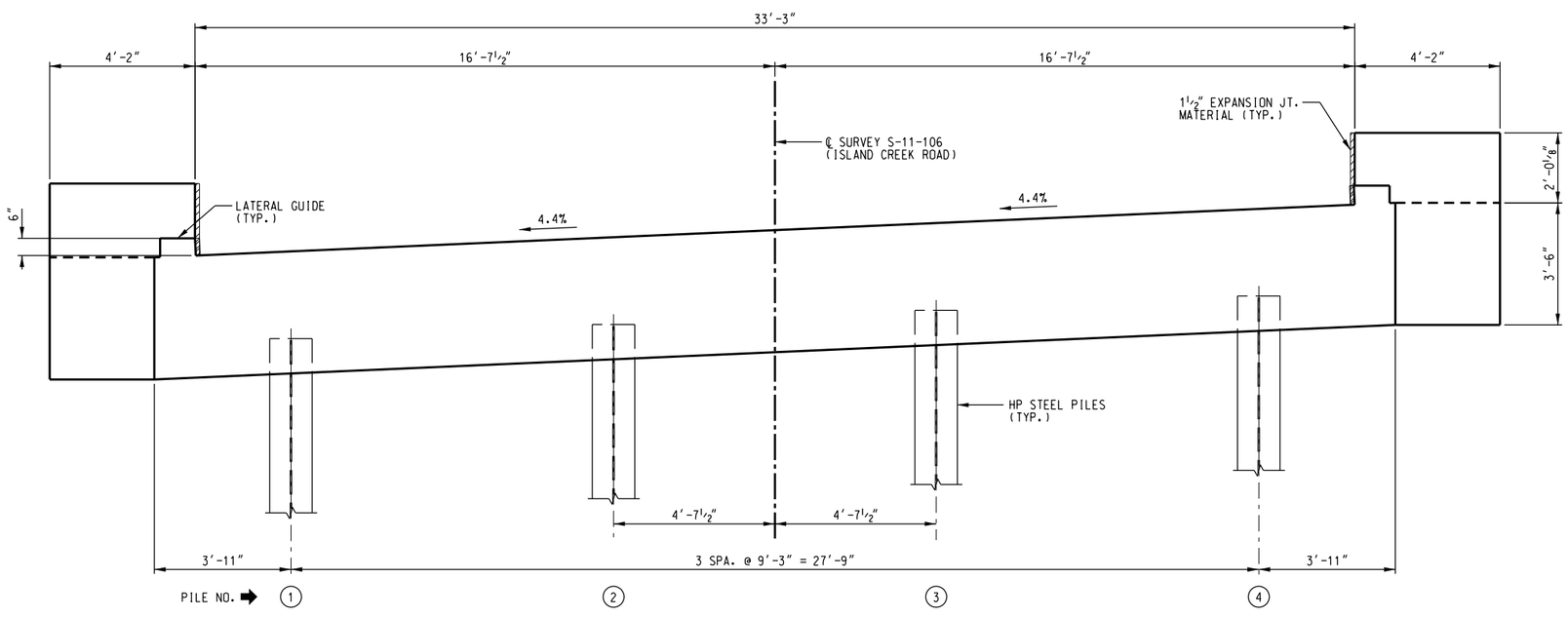

END BENT ELEVATION

(END BENT 2 SHOWN LOOKING IN DIRECTION OF STATIONING. END BENT 1 SIMILAR)

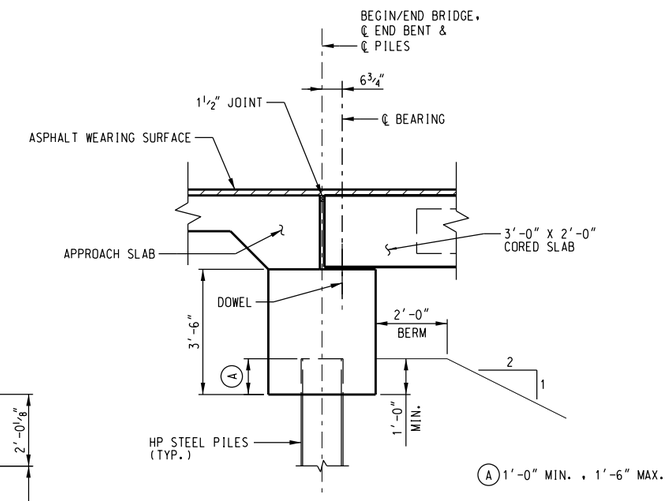

END BENT SECTION

TECHNICAL PROPOSAL PLANS

REV.			
REV.			
REV.			
REVIEWED			
QUAN.			
DR.			
DES.			
	BY	CHK.	DATE

lane

INFRASTRUCTURE CONSULTING & ENGINEERING

SOUTH CAROLINA
DEPARTMENT OF TRANSPORTATION

END BENT DETAILS

S-11-106 (ISLAND CREEK ROAD) BRIDGE REPLACEMENT OVER BRANCH OF SUCK CREEK

COUNTY	ROUTE
CHEROKEE	S-11-106

Z:\Projects\22-6\Bridge Package 14\S-106 over Suck Creek\Structures\Tech Proposal Plans\S-106_Suck Cr_END_BENT_DETAILS.dgn
10/17/2022

BRIDGE PLANS ID	SHEET NO.
P041149-B01	4

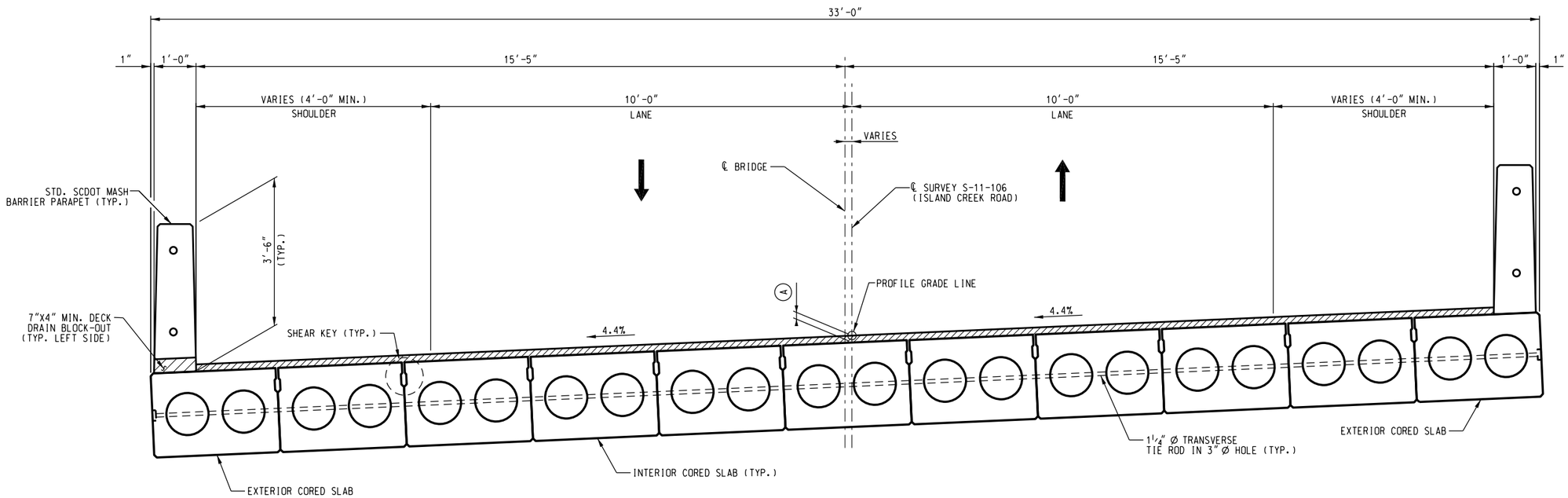

DESIGN EXCEPTION: BLOCK-OUT IN PARAPET INSTEAD OF 4" DIA. DECK DRAIN SHOWN ON SCDOT STD. DWG. 704-29a

TYPICAL SECTION

(LOOKING IN DIRECTION OF STATIONING)

(A) DUE TO THE SAG VERTICAL CURVE AND BEAM CAMBER, THE OVERLAY THICKNESS WILL VARY ALONG THE LENGTH OF THE BRIDGE. THE MINIMUM OVERLAY THICKNESS SHALL BE 2".

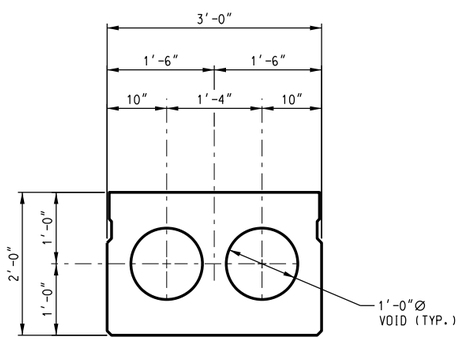

INTERIOR CORED SLAB SECTION

TECHNICAL PROPOSAL PLANS

REV.			
REV.			
REV.			
REVIEWED			
QUAN.			
DR.			
DES.			
	BY	CHK.	DATE

lane

INFRASTRUCTURE CONSULTING & ENGINEERING

SOUTH CAROLINA
DEPARTMENT OF TRANSPORTATION

SUPERSTRUCTURE
TYPICAL SECTION

S-11-106 (ISLAND CREEK ROAD) BRIDGE
REPLACEMENT OVER BRANCH OF SUCK CREEK

COUNTY CHEROKEE

ROUTE S-11-106

Z:\Projects\22-6\Bridge Package 14\S-106 over Suck Creek\Structures\Tech Proposal Plans\S-106_Suck Cr_TYP_SECT.dgn
10/17/2022

BRIDGE PLANS ID	SHEET NO.
P041148 - B01	1

South Carolina Department of Transportation

INDEX OF SHEETS

1. TITLE SHEET
2. BRIDGE PLAN AND PROFILE
3. END BENT DETAILS
4. SUPERSTRUCTURE TYPICAL SECTION

Design Reference for these plans is the:

LVB

Supplemental Design Criteria For
Low Volume Bridge Replacement Projects

PROPOSED PLANS FOR

CHEROKEE COUNTY
PROJECT ID P041148
STATE ROUTE S-11-56 (MONTGOMERY DRIVE)
REPLACE BRIDGE OVER HORSE CREEK

Approximate Location of Bridge is

Latitude	35°10'34" N
Longitude	81°51'56" W

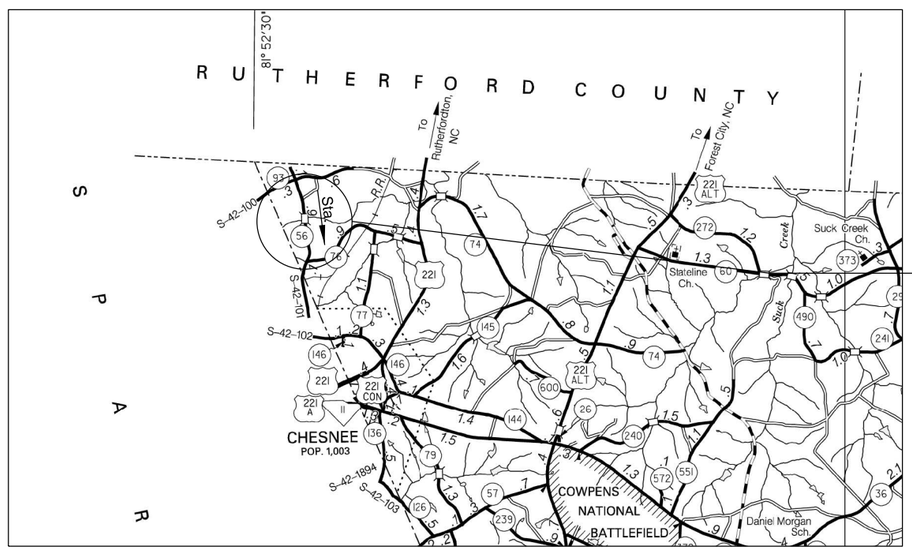

-N-

LAYOUT

3 DAYS BEFORE DIGGING IN
SOUTH CAROLINA

CALL 811

SOUTH CAROLINA 811 (SC811)
WWW.SC811.COM
ALL UTILITIES MAY NOT BE A MEMBER OF SC811

ASSET ID NOT ASSIGNED

TRAFFIC DATA

2020	ADT	375	V.P.D.	
2040	ADT	480	V.P.D.	
TRUCKS		5	%	

NET LENGTH OF ROADWAY	0.000	MILES
NET LENGTH OF BRIDGES	0.009	MILES
NET LENGTH OF PROJECT	0.009	MILES
LENGTH OF EXCEPTIONS	0.000	MILES
GROSS LENGTH OF PROJECT	0.009	MILES

NOTE: EXCEPT AS MAY OTHERWISE BE SPECIFIED ON THE PLANS OR IN THE SPECIAL PROVISIONS, ALL MATERIALS AND WORKMANSHIP ON THIS PROJECT SHALL CONFORM TO THE SOUTH CAROLINA DEPARTMENT OF TRANSPORTATION STANDARD SPECIFICATIONS FOR HIGHWAY CONSTRUCTION (2007 EDITION) AND THE STANDARD DRAWINGS FOR ROAD CONSTRUCTION IN EFFECT AT THE TIME OF THE RELEASE OF THE FINAL RFP.

lane

INFRASTRUCTURE CONSULTING & ENGINEERING

PLANS PREPARED BY:

INFRASTRUCTURE CONSULTING & ENGINEERING

110 MIDLANDS COURT
WEST COLUMBIA, SC 29169
Telephone: (803) 822-0333

ENGINEER OF RECORD

TECHNICAL PROPOSAL PLANS

FOR CONSTRUCTION : _____ _____ DATE

REVIEWED		
DR.	JLJ	WRS
	BY	CHK

WRS	
09-22	DATE

Z:\Projects\22-6\Bridge Package 14\S-56 over Horse Creek\Structures\Tech Proposal Plans\S-56_Horse Cr_TITLE_SHT.dgn
10/17/2022

BRIDGE PLANS ID	SHEET NO.
P041148-B01	2

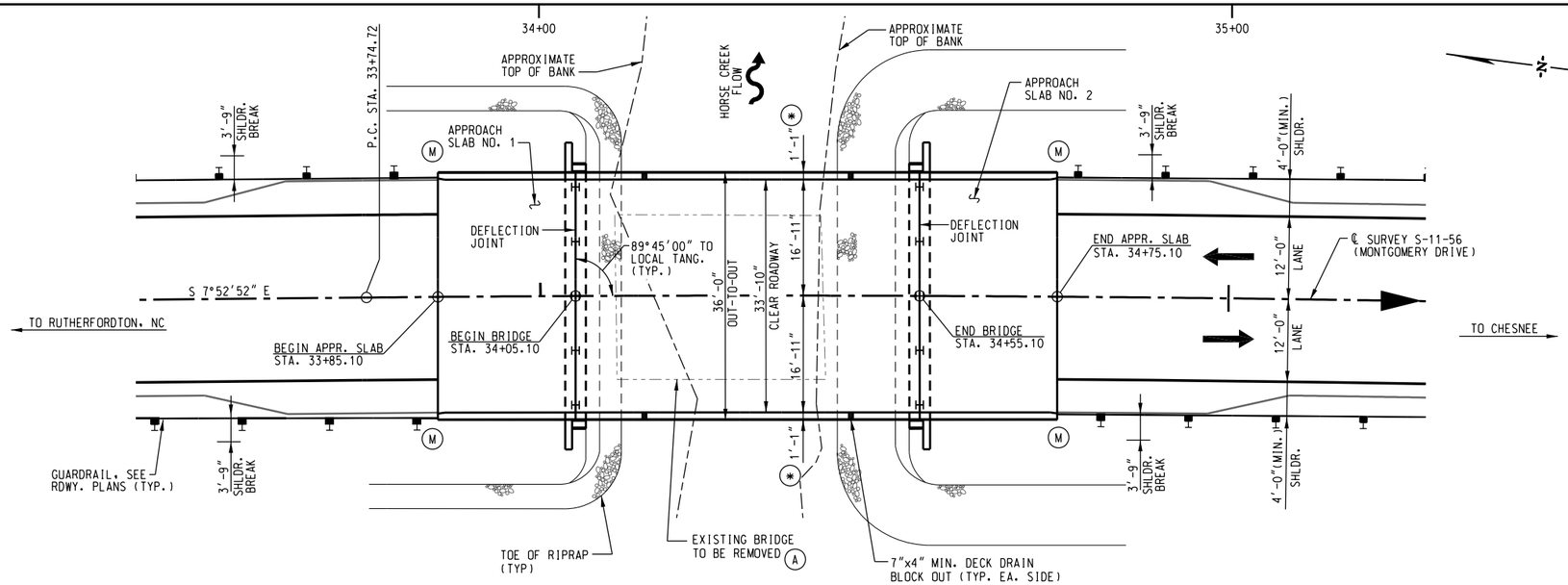

PLAN

NOTES:

BRIDGE END DRAINAGE NOT SHOWN. SEE ROADWAY PLANS.

(A) REMOVE AND DISPOSE OF EXISTING 30'-0" x 24'-0" ± SINGLE SPAN STEEL BRIDGE AND APPURTENANCES IN ACCORDANCE WITH SECTION 202.4.2 OF THE STANDARD SPECIFICATIONS. REMOVE AND DISPOSE OF EXISTING ABUTMENT WALL DOWN TO NORMAL WATER ELEVATION LEAVING THE BOTTOM PORTION OF WALL IN PLACE DURING CONSTRUCTION, TO AVOID ENVIRONMENTAL IMPACTS TO THE CREEK.

(*) INCLUDES 1'-0" MASH BARRIER AND 1" SLAB EXTENSION.

(M) DENOTES MTBBC2 GUARDRAIL ATTACHMENT

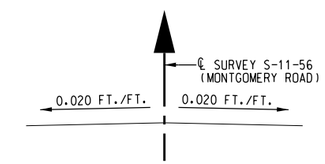

TYPICAL THROUGHOUT BRIDGE

SUPERELEVATION SKETCH

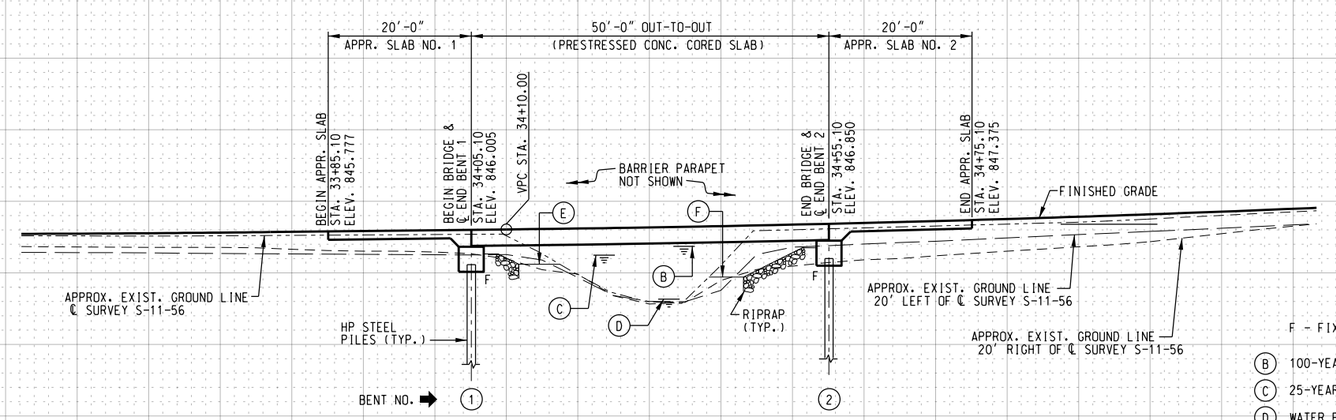

SECTION ALONG ℄ SURVEY S-11-56

F - FIXED

(B) 100-YEAR HW ELEV 843.49'

(C) 25-YEAR HW ELEV 842.28'

(D) WATER ELEVATION = 836.11' TIME OF SURVEY (2/28/22)

(E) PROPOSED BENCH ELEV. = 841.00'

(F) PROPOSED BENCH ELEV. = 839.20'

HYDROLOGY DATA

DA = 1 SQ. MI.
DESIGN FLOOD: 4% AEP (25-YR.)
Q (AEP-4%) = 501 CFS
V (AEP-4%) = 4.7 FT./SEC.
W.S. ELEV. (AEP-4%) = 842.35 FT.
DESIGN FLOOD: 1% AEP (100-YR.)
Q (AEP-1%) = 718 CFS
V (AEP-1%) = 4.7 FT./SEC.
W.S. ELEV. (AEP-1%) = 843.31 FT.

BACKWATER ELEVATION UPSTREAM OF BRIDGE:
4% AEP (25-YR.) H.W. ELEV. = 842.28 FT. (INCLUDING 0.69 FT. BACKWATER)
1% AEP (100-YR.) H.W. ELEV. = 843.49 FT. (INCLUDING 0.87 FT. BACKWATER)

STRUCTURE OVERTOPPING FLOOD:
0.2% AEP (500-YR.) FLOW = 985 CFS
OVERTOPPING FLOW = GREATER THAN 0.2% AEP (500-YR.) FLOW

VPI = 34+95.00
ELEV. = 847.03
V.C. = 170'
(+) 1.14% (+) 5.73%

VERTICAL GRADE DATA

TECHNICAL PROPOSAL PLANS

REV.			
REV.			
REV.			
REVIEWED			
QUAN.			
DR.			
DES.			
	BY	CHK.	DATE

lane

INFRASTRUCTURE CONSULTING & ENGINEERING

SOUTH CAROLINA DEPARTMENT OF TRANSPORTATION

BRIDGE PLAN AND PROFILE

REPLACE S-11-56 (MONTGOMERY DR.) BRIDGE OVER HORSE CREEK

COUNTY: CHEROKEE

ROUTE: S-11-56

DRAWING NO. 700-06

Z:\Projects\22-61\Bridge Package 14\S-56 over Horse Creek\Structures\Tech ProposalPlans\S-56_Horse Cr_PLAN_PROFILE.dgn
10/17/2022

BRIDGE PLANS ID	SHEET NO.
P041148-B01	3

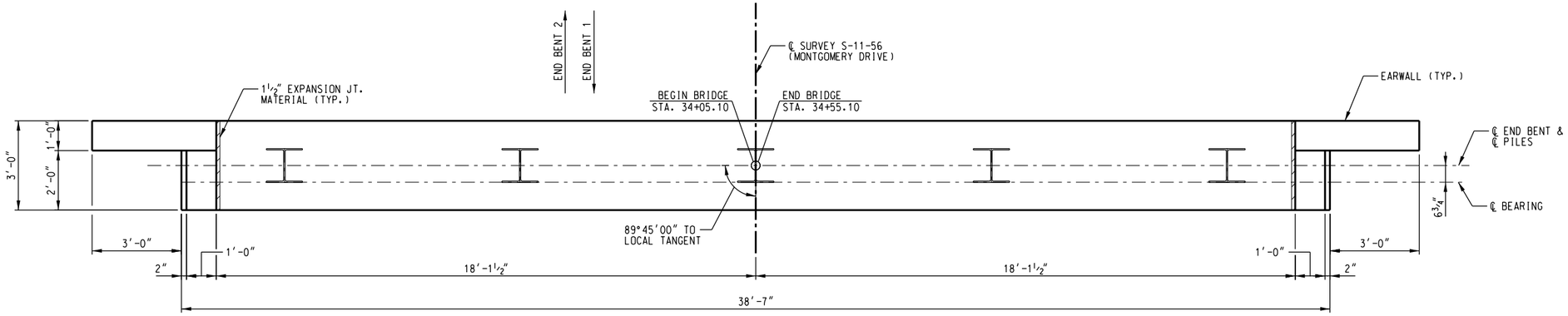

END BENT PLAN

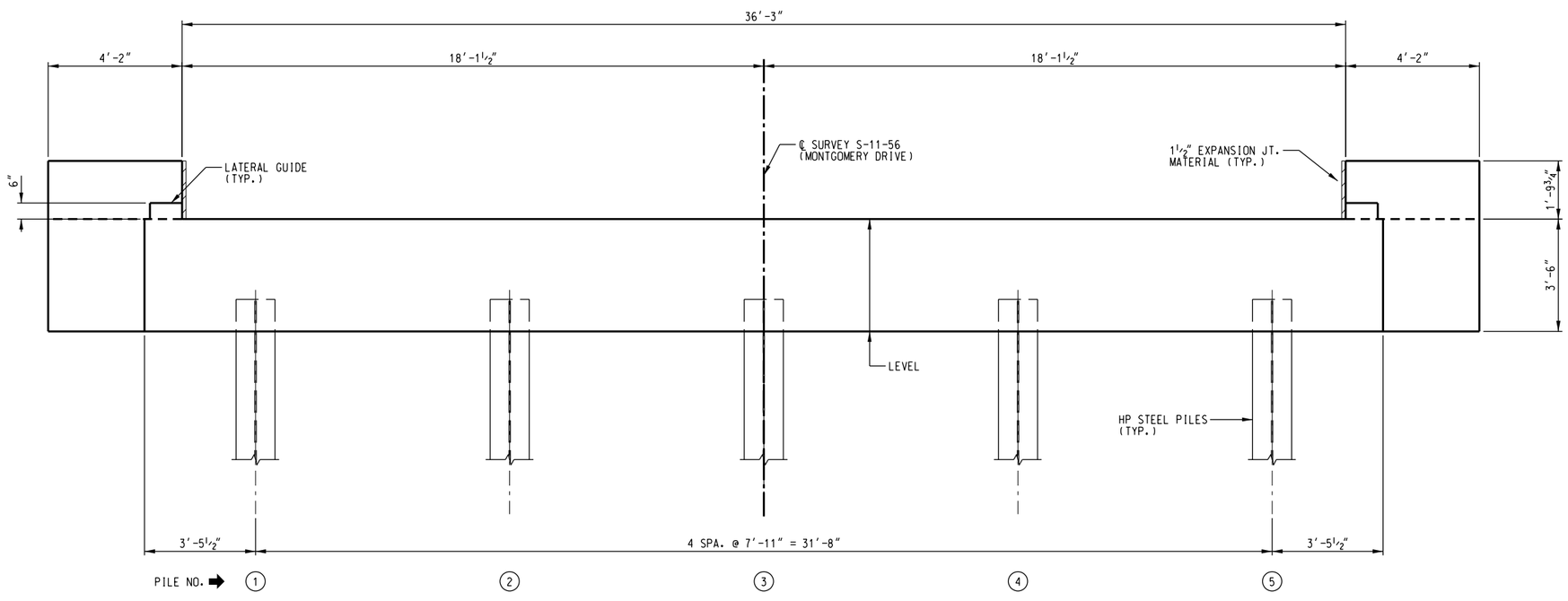

END BENT ELEVATION

(END BENT 2 SHOWN LOOKING IN DIRECTION OF STATIONING, END BENT 1 SIMILAR)

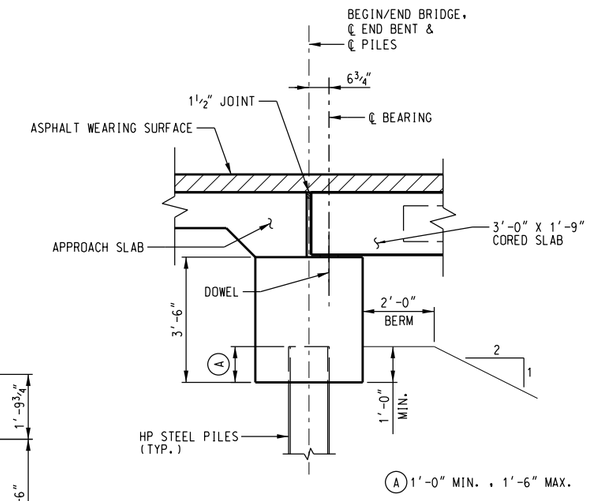

END BENT SECTION

lane

INFRASTRUCTURE CONSULTING & ENGINEERING

SOUTH CAROLINA
DEPARTMENT OF TRANSPORTATION

TECHNICAL PROPOSAL PLANS

REV.			
REV.			
REV.			
REVIEWED			
QUAN.			
DR.			
DES.			
	BY	CHK.	DATE

END BENT DETAILS

S-11-56 (MONTGOMERY ROAD)
BRIDGE REPLACEMENT OVER HORSE CREEK

COUNTY CHEROKEE

ROUTE S-11-56

Z:\Projects\22-61Bridge Package 14\S-56 over Horse Creek\Structures\Tech Proposal Plans\S-56_Horse Cr_END_BENT_DETAILS.dgn
10/17/2022

BRIDGE PLANS ID	SHEET NO.
P041148-B01	4

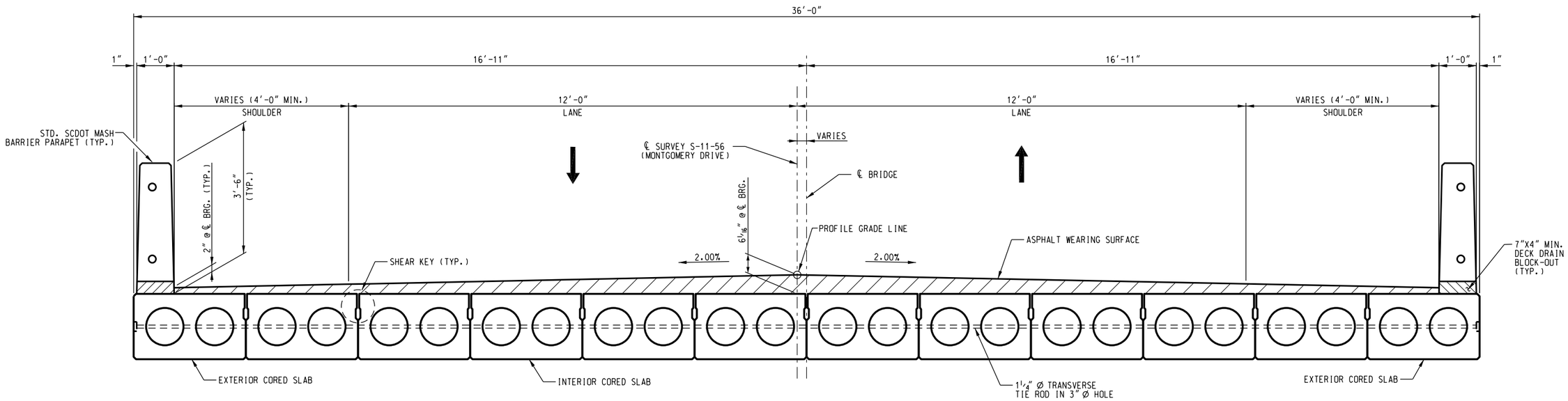

TYPICAL SECTION

(LOOKING IN DIRECTION OF STATIONING)

DESIGN EXCEPTION: BLOCK-OUT IN PARAPET INSTEAD OF 4" DIA. DECK DRAIN SHOWN ON SCDOT STD. DWG. 704-29a

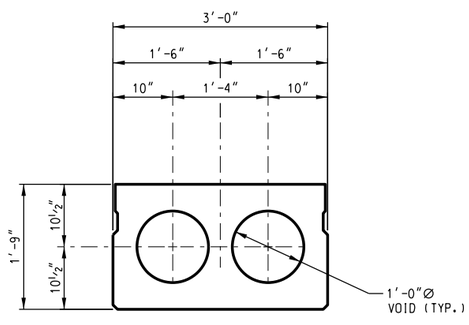

INTERIOR CORED SLAB SECTION

TECHNICAL PROPOSAL PLANS

REV.			
REV.			
REV.			
REVIEWED			
QUAN.			
DR.			
DES.			
	BY	CHK.	DATE

lane INFRASTRUCTURE CONSULTING & ENGINEERING

SOUTH CAROLINA DEPARTMENT OF TRANSPORTATION

SUPERSTRUCTURE TYPICAL SECTION

S-11-56 (MONTGOMERY ROAD) BRIDGE REPLACEMENT OVER HORSE CREEK

COUNTY CHEROKEE | ROUTE S-11-56

Z:\Projects\22-6\Bridge Package 14\S-56 over Horse Creek\Structures\Tech ProposalPlans\S-56_Horse Cr_TYP_SECT.dgn
10/17/2022

CONCEPTUAL PLANS

A.3 – CPM Schedule

APPENDIX A

SCDOT Bridge Package 14 DB Project Contract ID 1162220 - Cherokee County

Activity ID	Activity Name	Original Duration	Start	Finish
SCDOT DB Proj Contract ID 1162220 - Bridge Package 14 Cherokee Co		432	24-Oct-22	31-Oct-24
MILESTONES & ADMINISTRATION		739	24-Oct-22	31-Oct-24
M1200	Technical Proposal Submission (10/24/2022)	0	24-Oct-22	
M1000	SCDOT Opens Price Proposals & Public Read (12/01/2022)	39	24-Oct-22	01-Dec-22
M1010	SCDOT Approves Proposal / Issues Contract Award (15cd being used after Public Read of Pricing)	15	02-Dec-22	16-Dec-22
M1020	Contract Execution (30cd being used)	30	17-Dec-22	15-Jan-23
M1040	SCDOT Issues Notice to Proceed (NTP) (up to 45cd max after Contract Execution)	45	16-Jan-23	01-Mar-23
M1500	ANTICIPATED Notice to Proceed (NTP)	0		01-Mar-23
M1030	Project Time to Substantial Completion (640 Cal Days From NTP)	520	02-Mar-23	02-Aug-24
M1510	Substantial Completion (640 Cal Days From NTP) (11/30/2024)	0		02-Aug-24*
M1520	Punchlist	90	03-Aug-24	31-Oct-24
M1530	Final Project Completion (90 Days From SC) (02/28/2025)	0		31-Oct-24*
Construction Overview by Site		578	03-Jan-23	02-Aug-24
SR S-11-138 Goucher Creek Bridge (Goucher School Rd)		331	03-Jan-23	29-Nov-23
A3100	Design - S-11-138 Goucher Creek Bridge (Goucher School Rd)	196	03-Jan-23	17-Jul-23
A3110	Utility Relocations - S-11-138 Goucher Creek Bridge (Goucher School Rd)	132	03-Mar-23	12-Jul-23
A3120	ROW / Permitting - S-11-138 Goucher Creek Bridge (Goucher School Rd)	124	27-Apr-23	28-Aug-23
A3130	Procurement - S-11-138 Goucher Creek Bridge (Goucher School Rd)	120	17-May-23	13-Sep-23
A3140	Construction - S-11-138 Goucher Creek Bridge (Goucher School Rd) (180cd)	93	29-Aug-23	29-Nov-23
SR S-11-226 Unnamed Creek Bridge (Hammett Grove Rd)		404	09-Feb-23	18-Mar-24
A3160	Design - S-11-226 Unnamed Creek Bridge (Hammett Grove Rd)	195	09-Feb-23	22-Aug-23
A3170	Utility Relocations - S-11-226 Unnamed Creek Bridge (Hammett Grove Rd)	132	23-Mar-23	01-Aug-23
A3180	ROW / Permitting - S-11-226 Unnamed Creek Bridge (Hammett Grove Rd)	140	18-May-23	04-Oct-23
A3190	Procurement - S-11-226 Unnamed Creek Bridge (Hammett Grove Rd)	120	23-Jun-23	20-Oct-23
A3150	Construction - S-11-226 Unnamed Creek Bridge (Hammett Grove Rd) (180cd)	124	16-Nov-23	18-Mar-24
SR S-11-86 Kings Creek Bridge (Rock House Rd)		396	21-Mar-23	19-Apr-24
A3200	Design - S-11-86 Kings Creek Bridge (Rock House Rd)	186	21-Mar-23	22-Sep-23
A3210	Utility Relocations - S-11-86 Kings Creek Bridge (Rock House Rd)	200	24-Apr-23	09-Nov-23
A3220	ROW / Permitting - S-11-86 Kings Creek Bridge (Rock House Rd)	140	20-Jun-23	06-Nov-23
A3230	Procurement - S-11-86 Kings Creek Bridge (Rock House Rd)	120	26-Jul-23	22-Nov-23
A3240	Construction - S-11-86 Kings Creek Bridge (Rock House Rd) (210cd)	120	22-Dec-23	19-Apr-24
SR S-11-106 Suck Creek Bridge (Island Creek Rd)		304	29-Aug-23	27-Jun-24
A3250	Design - S-11-106 Suck Creek Bridge (Island Creek Rd)	172	29-Aug-23	16-Feb-24
A3260	Utility Relocations - S-11-106 Suck Creek Bridge (Island Creek Rd)	128	27-Sep-23	01-Feb-24
A3270	ROW / Permitting - S-11-106 Suck Creek Bridge (Island Creek Rd)	127	27-Nov-23	01-Apr-24
A3280	Procurement - S-11-106 Suck Creek Bridge (Island Creek Rd)	120	16-Dec-23	13-Apr-24
A3290	Construction - S-11-106 Suck Creek Bridge (Island Creek Rd) (120cd)	85	04-Apr-24	27-Jun-24
SR S-11-56 Horse Creek Bridge (Montgomery Dr)		325	13-Sep-23	02-Aug-24
A3300	Design - S-11-56 Horse Creek Bridge (Montgomery Dr)	174	13-Sep-23	04-Mar-24
A3310	Utility Relocations - S-11-56 Horse Creek Bridge (Montgomery Dr)	103	12-Oct-23	22-Jan-24
A3320	ROW / Permitting - S-11-56 Horse Creek Bridge (Montgomery Dr)	127	11-Dec-23	15-Apr-24
A3330	Procurement - S-11-56 Horse Creek Bridge (Montgomery Dr)	120	03-Jan-24	01-May-24
A3340	Construction - S-11-56 Horse Creek Bridge (Montgomery Dr) (120cd)	79	16-May-24	02-Aug-24
POTENTIAL RISKS		255	03-Mar-23	07-Mar-24
R2690	Utility Relocations Completed within 180cd after NTP - S-11-138 Goucher Creek Bridge (Goucher School Rd)	92	03-Mar-23	12-Jul-23
R2710	ROW Acquired within 180cd after NTP - S-11-138 Goucher Creek Bridge (Goucher School Rd)	60	27-Apr-23	21-Jul-23
R2700	USACE Permits for S-11-226 Unnamed Creek Bridge (Hammett Grove Rd)	70	18-May-23	25-Aug-23
R2720	Drilled Shaft Installations - S-11-138 Goucher Creek Bridge (Goucher School Rd)	11	14-Sep-23	28-Sep-23
R2705	USACE Permits for S-11-106 Suck Creek Bridge (Island Creek Rd)	70	27-Nov-23	07-Mar-24
R2725	Drilled Shaft Installations - S-11-86 Kings Creek Bridge (Rock House Rd)	11	12-Jan-24	29-Jan-24
SUBMITTALS		23	06-Jan-23	15-Feb-23
Baseline Schedule Submission		23	06-Jan-23	15-Feb-23
S1000	Prep/Submit Project Baseline Schedule	20	06-Jan-23	25-Jan-23
S1005	SCDOT Reviews Project Baseline Schedule	15	26-Jan-23	15-Feb-23
S1035	SCDOT Accepts Project Baseline Schedule	0		15-Feb-23

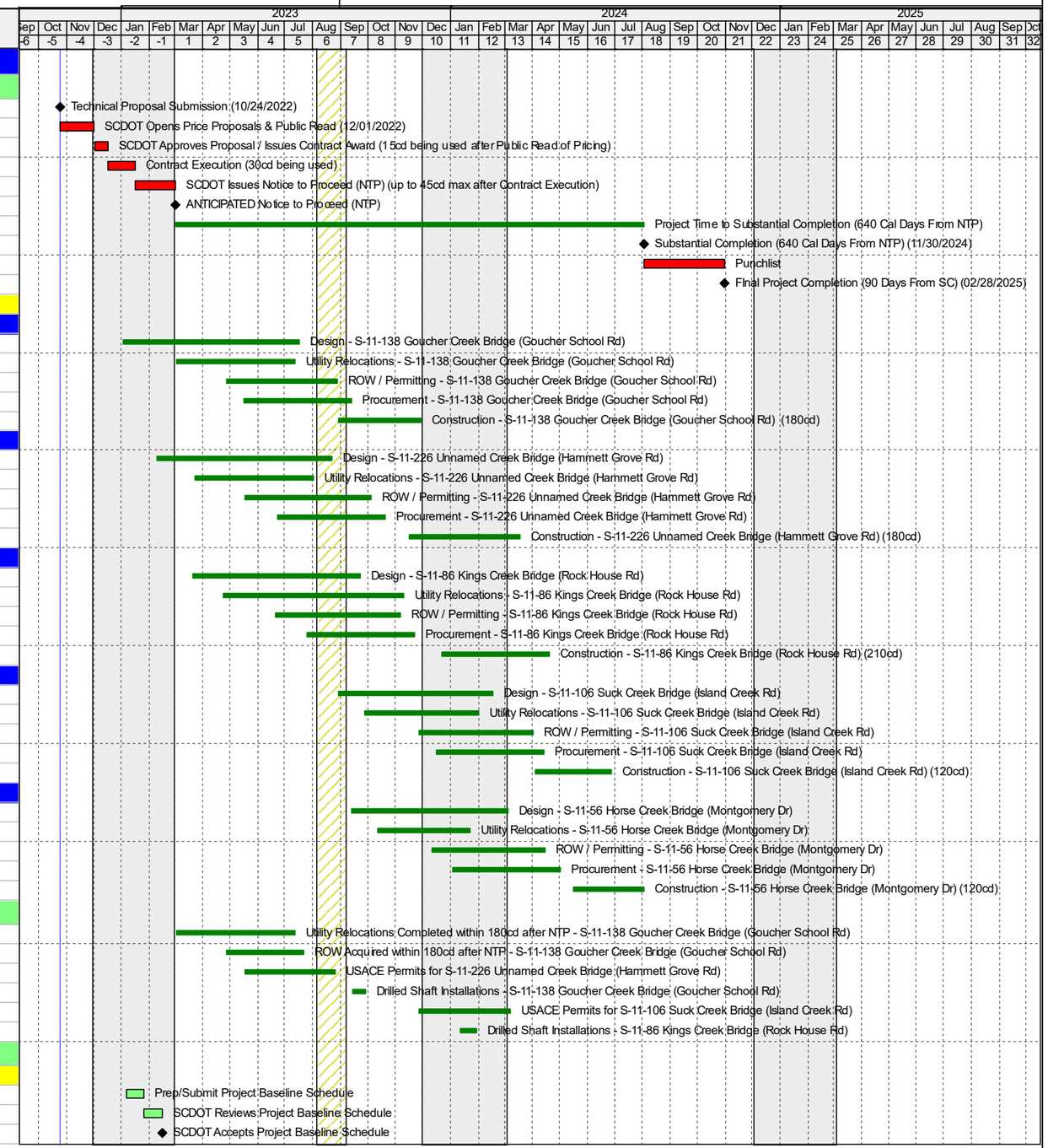

Remaining Level of Effort | Remaining Work | ◆ Milestone
Actual Work | Critical Remaining Work

Technical Proposal Schedule

SCDOT Bridge Package 14 DB Project Contract ID 1162220 - Cherokee County

Activity ID	Activity Name	Original Duration	Start	Finish
Other Admin Prestart Submissions		23	06-Jan-23	15-Feb-23
S1010	Submit Contract Deliverables Matrix	20	06-Jan-23	25-Jan-23
S1020	Submit Schedule of Values	20	06-Jan-23	25-Jan-23
S1030	Submit Community & Public Relations Support Plan	20	06-Jan-23	25-Jan-23
S1040	Submit Escrow Proposal Documents	20	06-Jan-23	25-Jan-23
SC DOT Reviews - Prestart Submissions		12	26-Jan-23	15-Feb-23
S1050	SCDOT Reviews Contract Deliverables Matrix	15	26-Jan-23	15-Feb-23
S1070	SCDOT Reviews Schedule of Values	15	26-Jan-23	15-Feb-23
S1090	SCDOT Reviews Community & Public Relations Support Plan	15	26-Jan-23	15-Feb-23
S1110	SCDOT Reviews Escrow Proposal Documents	15	26-Jan-23	15-Feb-23
S1060	SCDOT Accepts Contract Deliverables Matrix	0		15-Feb-23
S1080	SCDOT Accepts Schedule of Values	0		15-Feb-23
S1100	SCDOT Accepts Community & Public Relations Support Plan	0		15-Feb-23
S1120	SCDOT Accepts Escrow Proposal Documents	0		15-Feb-23
DESIGN		293	03-Jan-23	04-Mar-24
Design Review Submittal 000		26	17-Jan-23	22-Feb-23
D2500	Prepare and Submit Design QC Plan	3	17-Jan-23	19-Jan-23
D2510	Prepare and Submit Design Submittal Schedule	3	17-Jan-23	19-Jan-23
D2520	SCDOT Review - Submittal 000	10	20-Jan-23	02-Feb-23
D2530	ICE - Address Comments & Resubmit	3	03-Feb-23	07-Feb-23
D2540	SCDOT Review/Approval - Submittal 000	10	08-Feb-23	22-Feb-23
Detour Plans		35	13-Jan-23	06-Mar-23
Plan Package		5	13-Jan-23	20-Jan-23
D1930	Prepare Detour Plans	5	13-Jan-23	20-Jan-23
D1940	Submit Detour Plans	0		20-Jan-23
Review		29	23-Jan-23	03-Mar-23
D1880	Review Submittal Package - Detour Plans	15	23-Jan-23	10-Feb-23
D1890	Respond to Comments - Detour Plans	2	13-Feb-23	14-Feb-23
D1900	Status Comments - Detour Plans	5	15-Feb-23	22-Feb-23
D1910	Submit Responses - Detour Plans	2	23-Feb-23	24-Feb-23
D1920	Update Statuses / Closeout Comments - Detour Plans	5	27-Feb-23	03-Mar-23
RFC Plans		1	06-Mar-23	06-Mar-23
D2680	Sign and Submit RFC Detour Plans	1	06-Mar-23	06-Mar-23
Meeting w/ Utility Offices		1	02-Mar-23	02-Mar-23
D3300	Contractor/ICE/SCDOT Utility Coordination Meeting	1	02-Mar-23	02-Mar-23
SR S-11-138 Goucher Creek Bridge (Goucher School Rd)		136	03-Jan-23	17-Jul-23
ROW / Preliminary Plan Package		80	03-Jan-23	26-Apr-23
D1950	Prepare Right-of-Way Submittal Package - S-11-138 Goucher Creek Bridge (Goucher School Rd)	26	03-Jan-23	08-Feb-23
D1960	Prepare Preliminary Bridge Submittal Package - S-11-138 Goucher Creek Bridge (Goucher School Rd)	26	03-Jan-23	08-Feb-23
D1970	Submit ROW / Preliminary Plan Package - S-11-138 Goucher Creek Bridge (Goucher School Rd)	0		01-Mar-23
Review		40	02-Mar-23	26-Apr-23
D1380	Review Submittal Package - S-11-138 Goucher Creek Bridge (Goucher School Rd)	15	02-Mar-23	22-Mar-23
D1390	Respond to Comments - S-11-138 Goucher Creek Bridge (Goucher School Rd)	5	23-Mar-23	29-Mar-23
D1400	Status Comments - S-11-138 Goucher Creek Bridge (Goucher School Rd)	5	30-Mar-23	05-Apr-23
D1410	Submit Responses - S-11-138 Goucher Creek Bridge (Goucher School Rd)	5	06-Apr-23	12-Apr-23
D1420	Update Statuses / Closeout Comments - S-11-138 Goucher Creek Bridge (Goucher School Rd)	10	13-Apr-23	26-Apr-23
Final Package		54	27-Apr-23	13-Jul-23
D2100	Prepare Final Roadway Submittal Package - S-11-138 Goucher Creek Bridge (Goucher School Rd)	14	27-Apr-23	16-May-23
D2110	Prepare Final Bridge Submittal Package - S-11-138 Goucher Creek Bridge (Goucher School Rd)	14	27-Apr-23	16-May-23
D2120	Submit Final Roadway and Bridge Packages - S-11-138 Goucher Creek Bridge (Goucher School Rd)	0		16-May-23
Review		40	17-May-23	13-Jul-23
D1430	Review Final Submittal Package - S-11-138 Goucher Creek Bridge (Goucher School Rd)	15	17-May-23	07-Jun-23
D1440	Respond to Comments Final Submittal Package - S-11-138 Goucher Creek Bridge (Goucher School Rd)	5	08-Jun-23	14-Jun-23
D1450	Status Comments Final Submittal Package - S-11-138 Goucher Creek Bridge (Goucher School Rd)	5	15-Jun-23	21-Jun-23
D1460	Submit Responses Final Submittal Package - S-11-138 Goucher Creek Bridge (Goucher School Rd)	5	22-Jun-23	28-Jun-23
D1470	Update Statuses / Closeout Comments Final Submittal Package - S-11-138 Goucher Creek Bridge (Goucher School Rd)	10	29-Jun-23	13-Jul-23

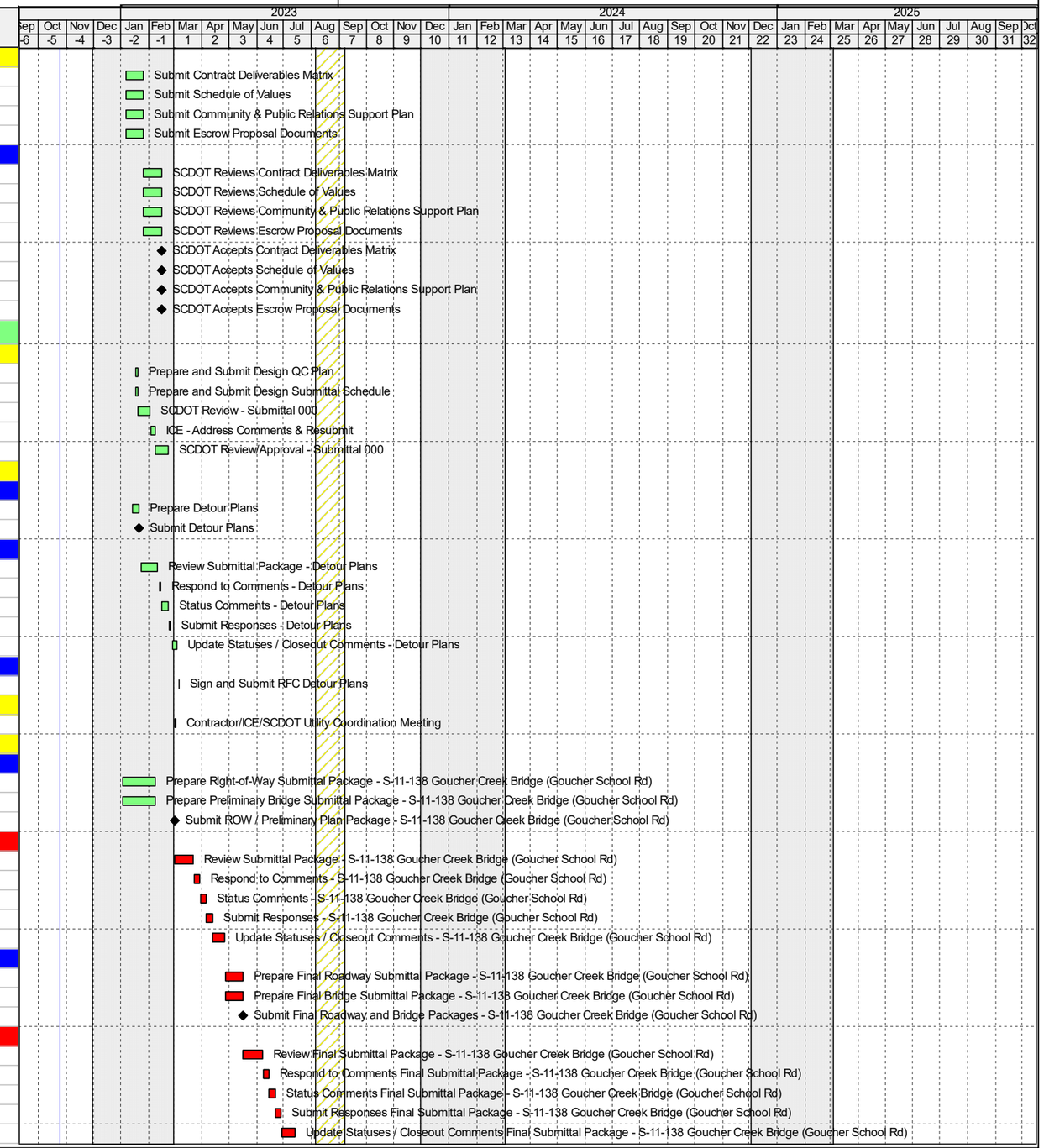

Remaining Level of Effort | Remaining Work | ◆ Milestone
Actual Work | Critical Remaining Work

Technical Proposal Schedule

SCDOT Bridge Package 14 DB Project Contract ID 1162220 - Cherokee County

Activity ID	Activity Name	Original Duration	Start	Finish
RFC Plans		2	14-Jul-23	17-Jul-23
D2550	Sign and Submit RFC Roadway Package - S-11-138 Goucher Creek Bridge (Goucher School Rd)	2	14-Jul-23	17-Jul-23
D2560	Sign and Submit RFC Bridge Package - S-11-138 Goucher Creek Bridge (Goucher School Rd)	2	14-Jul-23	17-Jul-23
SR S-11-226 Unnamed Creek Bridge (Hammett Grove Rd)		136	09-Feb-23	22-Aug-23
ROW / Preliminary Plan Package		69	09-Feb-23	17-May-23
D1980	Prepare Right-of-Way Submittal Package - S-11-226 Unnamed Creek Bridge (Hammett Grove Rd)	27	09-Feb-23	20-Mar-23
D1990	Prepare Preliminary Bridge Submittal Package - S-11-226 Unnamed Creek Bridge (Hammett Grove Rd)	27	09-Feb-23	20-Mar-23
D2000	Submit ROW / Preliminary Plan Package - S-11-226 Unnamed Creek Bridge (Hammett Grove Rd)	0		22-Mar-23
Review		40	23-Mar-23	17-May-23
D1480	Review Submittal Package - S-11-226 Unnamed Creek Bridge (Hammett Grove Rd)	15	23-Mar-23	12-Apr-23
D1490	Respond to Comments - S-11-226 Unnamed Creek Bridge (Hammett Grove Rd)	5	13-Apr-23	19-Apr-23
D1500	Status Comments - S-11-226 Unnamed Creek Bridge (Hammett Grove Rd)	5	20-Apr-23	26-Apr-23
D1510	Submit Responses - S-11-226 Unnamed Creek Bridge (Hammett Grove Rd)	5	27-Apr-23	03-May-23
D1520	Update Statuses / Closeout Comments - S-11-226 Unnamed Creek Bridge (Hammett Grove Rd)	10	04-May-23	17-May-23
Final Package		65	18-May-23	18-Aug-23
D2130	Prepare Final Roadway Submittal Package - S-11-226 Unnamed Creek Bridge (Hammett Grove Rd)	25	18-May-23	22-Jun-23
D2140	Prepare Final Bridge Submittal Package - S-11-226 Unnamed Creek Bridge (Hammett Grove Rd)	25	18-May-23	22-Jun-23
D2150	Submit Final Roadway and Bridge Packages - S-11-226 Unnamed Creek Bridge (Hammett Grove Rd)	0		22-Jun-23
Review		40	23-Jun-23	18-Aug-23
D1530	Review Final Submittal Package - S-11-226 Unnamed Creek Bridge (Hammett Grove Rd)	15	23-Jun-23	14-Jul-23
D1540	Respond to Comments Final Submittal Package - S-11-226 Unnamed Creek Bridge (Hammett Grove Rd)	5	17-Jul-23	21-Jul-23
D1550	Status Comments Final Submittal Package - S-11-226 Unnamed Creek Bridge (Hammett Grove Rd)	5	24-Jul-23	28-Jul-23
D1560	Submit Responses Final Submittal Package - S-11-226 Unnamed Creek Bridge (Hammett Grove Rd)	5	31-Jul-23	04-Aug-23
D1570	Update Statuses / Closeout Comments Final Submittal Package - S-11-226 Unnamed Creek Bridge (Hammett Grove Rd	10	07-Aug-23	18-Aug-23
RFC Plans		2	21-Aug-23	22-Aug-23
D2570	Sign and Submit RFC Roadway Package - S-11-226 Unnamed Creek Bridge (Hammett Grove Rd)	2	21-Aug-23	22-Aug-23
D2580	Sign and Submit RFC Bridge Package - S-11-226 Unnamed Creek Bridge (Hammett Grove Rd)	2	21-Aug-23	22-Aug-23
SR S-11-86 Kings Creek Bridge (Rock House Rd)		131	21-Mar-23	22-Sep-23
ROW / Preliminary Plan Package		64	21-Mar-23	19-Jun-23
D2010	Prepare Right-of-Way Submittal Package - S-11-86 Kings Creek Bridge (Rock House Rd)	24	21-Mar-23	21-Apr-23
D2020	Prepare Preliminary Bridge Submittal Package - S-11-86 Kings Creek Bridge (Rock House Rd)	24	21-Mar-23	21-Apr-23
D2030	Submit ROW / Preliminary Plan Package - S-11-86 Kings Creek Bridge (Rock House Rd)	0		21-Apr-23
Review		40	24-Apr-23	19-Jun-23
D1580	Review Submittal Package - S-11-86 Kings Creek Bridge (Rock House Rd)	15	24-Apr-23	12-May-23
D1590	Respond to Comments - S-11-86 Kings Creek Bridge (Rock House Rd)	5	15-May-23	19-May-23
D1600	Status Comments - S-11-86 Kings Creek Bridge (Rock House Rd)	5	22-May-23	26-May-23
D1610	Submit Responses - S-11-86 Kings Creek Bridge (Rock House Rd)	5	30-May-23	05-Jun-23
D1620	Update Statuses / Closeout Comments - S-11-86 Kings Creek Bridge (Rock House Rd)	10	06-Jun-23	19-Jun-23
Final Package		65	20-Jun-23	20-Sep-23
D2160	Prepare Final Roadway Submittal Package - S-11-86 Kings Creek Bridge (Rock House Rd)	25	20-Jun-23	25-Jul-23
D2170	Prepare Final Bridge Submittal Package - S-11-86 Kings Creek Bridge (Rock House Rd)	25	20-Jun-23	25-Jul-23
D2180	Submit Final Roadway and Bridge Packages - S-11-86 Kings Creek Bridge (Rock House Rd)	0		25-Jul-23
Review		40	26-Jul-23	20-Sep-23
D1630	Review Final Submittal Package - S-11-86 Kings Creek Bridge (Rock House Rd)	15	26-Jul-23	15-Aug-23
D1640	Respond to Comments Final Submittal Package - S-11-86 Kings Creek Bridge (Rock House Rd)	5	16-Aug-23	22-Aug-23
D1650	Status Comments Final Submittal Package - S-11-86 Kings Creek Bridge (Rock House Rd)	5	23-Aug-23	29-Aug-23
D1660	Submit Responses Final Submittal Package - S-11-86 Kings Creek Bridge (Rock House Rd)	5	30-Aug-23	06-Sep-23
D1670	Update Statuses / Closeout Comments Final Submittal Package - S-11-86 Kings Creek Bridge (Rock House Rd)	10	07-Sep-23	20-Sep-23
RFC Plans		2	21-Sep-23	22-Sep-23
D2590	Sign and Submit RFC Roadway Package - S-11-86 Kings Creek Bridge (Rock House Rd)	2	21-Sep-23	22-Sep-23
D2600	Sign and Submit RFC Bridge Package - S-11-86 Kings Creek Bridge (Rock House Rd)	2	21-Sep-23	22-Sep-23
SR S-11-106 Suck Creek Bridge (Island Creek Rd)		117	29-Aug-23	16-Feb-24
ROW / Preliminary Plan Package		60	29-Aug-23	24-Nov-23
D2040	Prepare Right-of-Way Submittal Package - S-11-106 Suck Creek Bridge (Island Creek Rd)	20	29-Aug-23	26-Sep-23
D2050	Prepare Preliminary Bridge Submittal Package - S-11-106 Suck Creek Bridge (Island Creek Rd)	20	29-Aug-23	26-Sep-23
D2060	Submit ROW / Preliminary Plan Package - S-11-106 Suck Creek Bridge (Island Creek Rd)	0		26-Sep-23

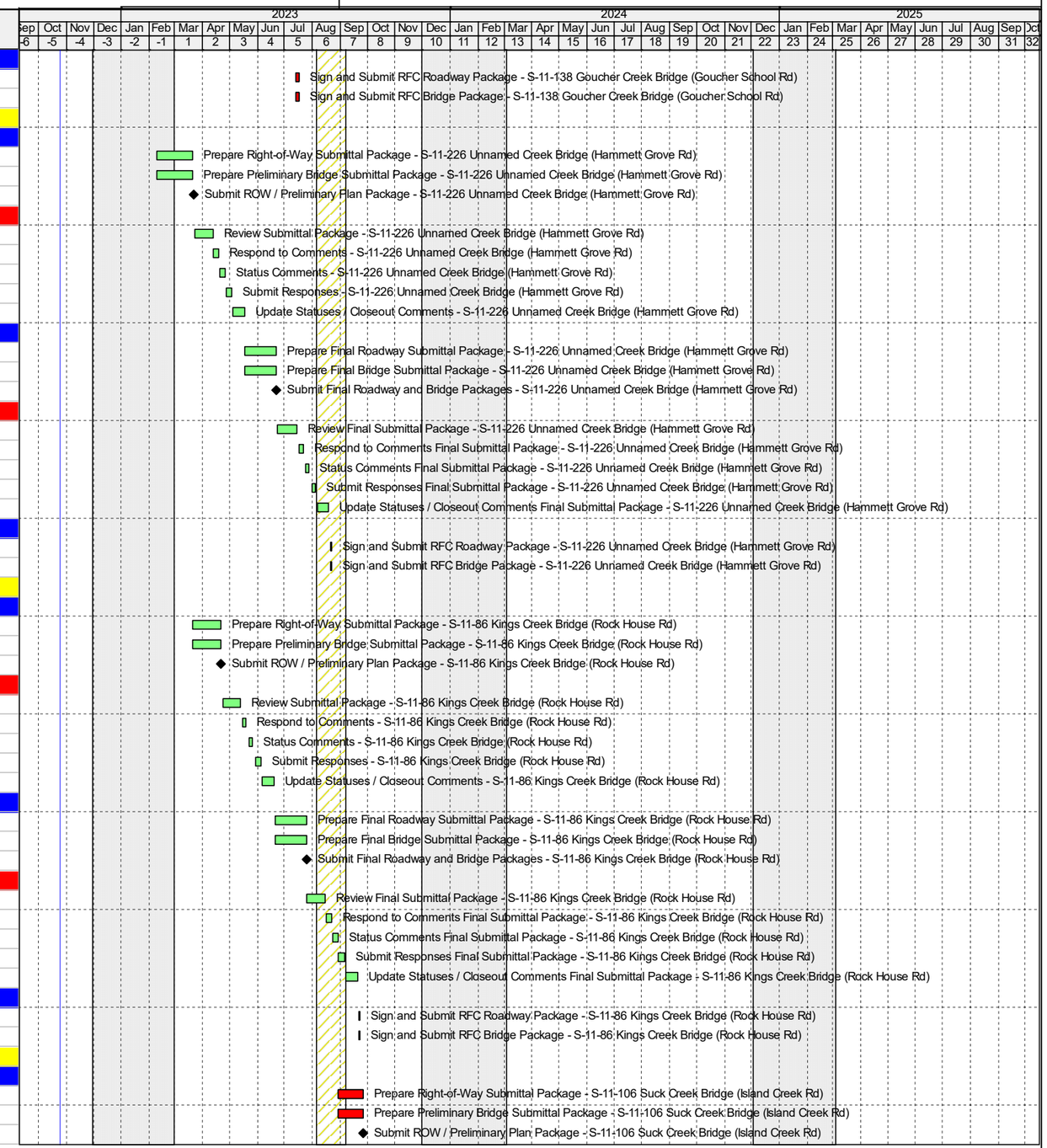

Remaining Level of Effort | Remaining Work | ◆ Milestone
Actual Work | Critical Remaining Work

Technical Proposal
Schedule

SCDOT Bridge Package 14 DB Project Contract ID 1162220 - Cherokee County

Activity ID	Activity Name	Original Duration	Start	Finish
Review		40	27-Sep-23	24-Nov-23
D1680	Review Submittal Package - S-11-106 Suck Creek Bridge (Island Creek Rd)	15	27-Sep-23	18-Oct-23
D1690	Respond to Comments - S-11-106 Suck Creek Bridge (Island Creek Rd)	5	19-Oct-23	25-Oct-23
D1700	Status Comments - S-11-106 Suck Creek Bridge (Island Creek Rd)	5	26-Oct-23	01-Nov-23
D1710	Submit Responses - S-11-106 Suck Creek Bridge (Island Creek Rd)	5	02-Nov-23	08-Nov-23
D1720	Update Statuses / Closeout Comments - S-11-106 Suck Creek Bridge (Island Creek Rd)	10	09-Nov-23	24-Nov-23
Final Package		55	27-Nov-23	14-Feb-24
D2190	Prepare Final Roadway Submittal Package - S-11-106 Suck Creek Bridge (Island Creek Rd)	15	27-Nov-23	15-Dec-23
D2200	Prepare Final Bridge Submittal Package - S-11-106 Suck Creek Bridge (Island Creek Rd)	15	27-Nov-23	15-Dec-23
D2210	Submit Final Roadway and Bridge Packages - S-11-106 Suck Creek Bridge (Island Creek Rd)	0		15-Dec-23
Review		40	18-Dec-23	14-Feb-24
D1730	Review Final Submittal Package - S-11-106 Suck Creek Bridge (Island Creek Rd)	15	18-Dec-23	09-Jan-24
D1740	Respond to Comments Final Submittal Package - S-11-106 Suck Creek Bridge (Island Creek Rd)	5	10-Jan-24	17-Jan-24
D1750	Status Comments Final Submittal Package - S-11-106 Suck Creek Bridge (Island Creek Rd)	5	18-Jan-24	24-Jan-24
D1760	Submit Responses Final Submittal Package - S-11-106 Suck Creek Bridge (Island Creek Rd)	5	25-Jan-24	31-Jan-24
D1770	Update Statuses / Closeout Comments Final Submittal Package - S-11-106 Suck Creek Bridge (Island Creek Rd)	10	01-Feb-24	14-Feb-24
RFC Plans		2	15-Feb-24	16-Feb-24
D2610	Sign and Submit RFC Roadway Package - S-11-106 Suck Creek Bridge (Island Creek Rd)	2	15-Feb-24	16-Feb-24
D2620	Sign and Submit RFC Bridge Package - S-11-106 Suck Creek Bridge (Island Creek Rd)	2	15-Feb-24	16-Feb-24
SR S-11-56 Horse Creek Bridge (Montgomery Dr)		117	13-Sep-23	04-Mar-24
ROW / Preliminary Plan Package		60	13-Sep-23	08-Dec-23
D2070	Prepare Right-of-Way Submittal Package - S-11-56 Horse Creek Bridge (Montgomery Dr)	20	13-Sep-23	10-Oct-23
D2080	Prepare Preliminary Bridge Submittal Package - S-11-56 Horse Creek Bridge (Montgomery Dr)	20	13-Sep-23	10-Oct-23
D2090	Submit ROW / Preliminary Plan Package - S-11-56 Horse Creek Bridge (Montgomery Dr)	0		10-Oct-23
Review		40	12-Oct-23	08-Dec-23
D1780	Review Submittal Package - S-11-56 Horse Creek Bridge (Montgomery Dr)	15	12-Oct-23	01-Nov-23
D1790	Respond to Comments - S-11-56 Horse Creek Bridge (Montgomery Dr)	5	02-Nov-23	08-Nov-23
D1800	Status Comments - S-11-56 Horse Creek Bridge (Montgomery Dr)	5	09-Nov-23	16-Nov-23
D1810	Submit Responses - S-11-56 Horse Creek Bridge (Montgomery Dr)	5	17-Nov-23	24-Nov-23
D1820	Update Statuses / Closeout Comments - S-11-56 Horse Creek Bridge (Montgomery Dr)	10	27-Nov-23	08-Dec-23
Final Package		55	11-Dec-23	29-Feb-24
D2220	Prepare Final Roadway Submittal Package - S-11-56 Horse Creek Bridge (Montgomery Dr)	15	11-Dec-23	02-Jan-24
D2230	Prepare Final Bridge Submittal Package - S-11-56 Horse Creek Bridge (Montgomery Dr)	15	11-Dec-23	02-Jan-24
D2240	Submit Final Roadway and Bridge Packages - S-11-56 Horse Creek Bridge (Montgomery Dr)	0		02-Jan-24
Review		40	03-Jan-24	29-Feb-24
D1830	Review Final Submittal Package - S-11-56 Horse Creek Bridge (Montgomery Dr)	15	03-Jan-24	24-Jan-24
D1840	Respond to Comments Final Submittal Package - S-11-56 Horse Creek Bridge (Montgomery Dr)	5	25-Jan-24	31-Jan-24
D1850	Status Comments Final Submittal Package - S-11-56 Horse Creek Bridge (Montgomery Dr)	5	01-Feb-24	07-Feb-24
D1860	Submit Responses Final Submittal Package - S-11-56 Horse Creek Bridge (Montgomery Dr)	5	08-Feb-24	14-Feb-24
D1870	Update Statuses / Closeout Comments Final Submittal Package - S-11-56 Horse Creek Bridge (Montgomery Dr)	10	15-Feb-24	29-Feb-24
RFC Plans		2	01-Mar-24	04-Mar-24
D2630	Sign and Submit RFC Roadway Package - S-11-56 Horse Creek Bridge (Montgomery Dr)	2	01-Mar-24	04-Mar-24
D2640	Sign and Submit RFC Bridge Package - S-11-56 Horse Creek Bridge (Montgomery Dr)	2	01-Mar-24	04-Mar-24
UTILITY Coordinations / Relocations		197	03-Mar-23	01-Feb-24
SR S-11-138 Goucher Creek Bridge (Goucher School Rd)		76	03-Mar-23	12-Jul-23
Goucher Water (Tri County) - waterline attached to Bridge		58	03-Mar-23	09-Jun-23
D2960	Act 36 / Water Bill Applic Appv - Goucher Water - S-11-138 Goucher Creek Bridge (Goucher School Rd)	15	03-Mar-23	23-Mar-23
D2970	Utility Coordination / Agreement / Engineering - Goucher Water - S-11-138 Goucher Creek Bridge (Goucher School Rd)	40	24-Mar-23	18-May-23
D2980	Utility Relocation - Goucher Water - S-11-138 Goucher Creek Bridge (Goucher School Rd)	22	19-May-23	09-Jun-23
AT&T Telecom		76	03-Mar-23	12-Jul-23
D2990	Utility Coordination / No Cost Package - AT&T telecom - S-11-138 Goucher Creek Bridge (Goucher School Rd)	20	03-Mar-23	30-Mar-23
D3000	Material Acquisition - AT&T telecom - S-11-138 Goucher Creek Bridge (Goucher School Rd)	10	31-Mar-23	13-Apr-23
D3010	Utility Relocation - AT&T telecom - S-11-138 Goucher Creek Bridge (Goucher School Rd)	90	14-Apr-23	12-Jul-23
SR S-11-226 Unnamed Creek Bridge (Hammett Grove Rd)		77	23-Mar-23	01-Aug-23
AT&T Telecom		77	23-Mar-23	01-Aug-23
D3020	Utility Coordination / No Cost Package - AT&T telecom - S-11-226 Unnamed Creek Bridge (Hammett Grove Rd)	20	23-Mar-23	19-Apr-23

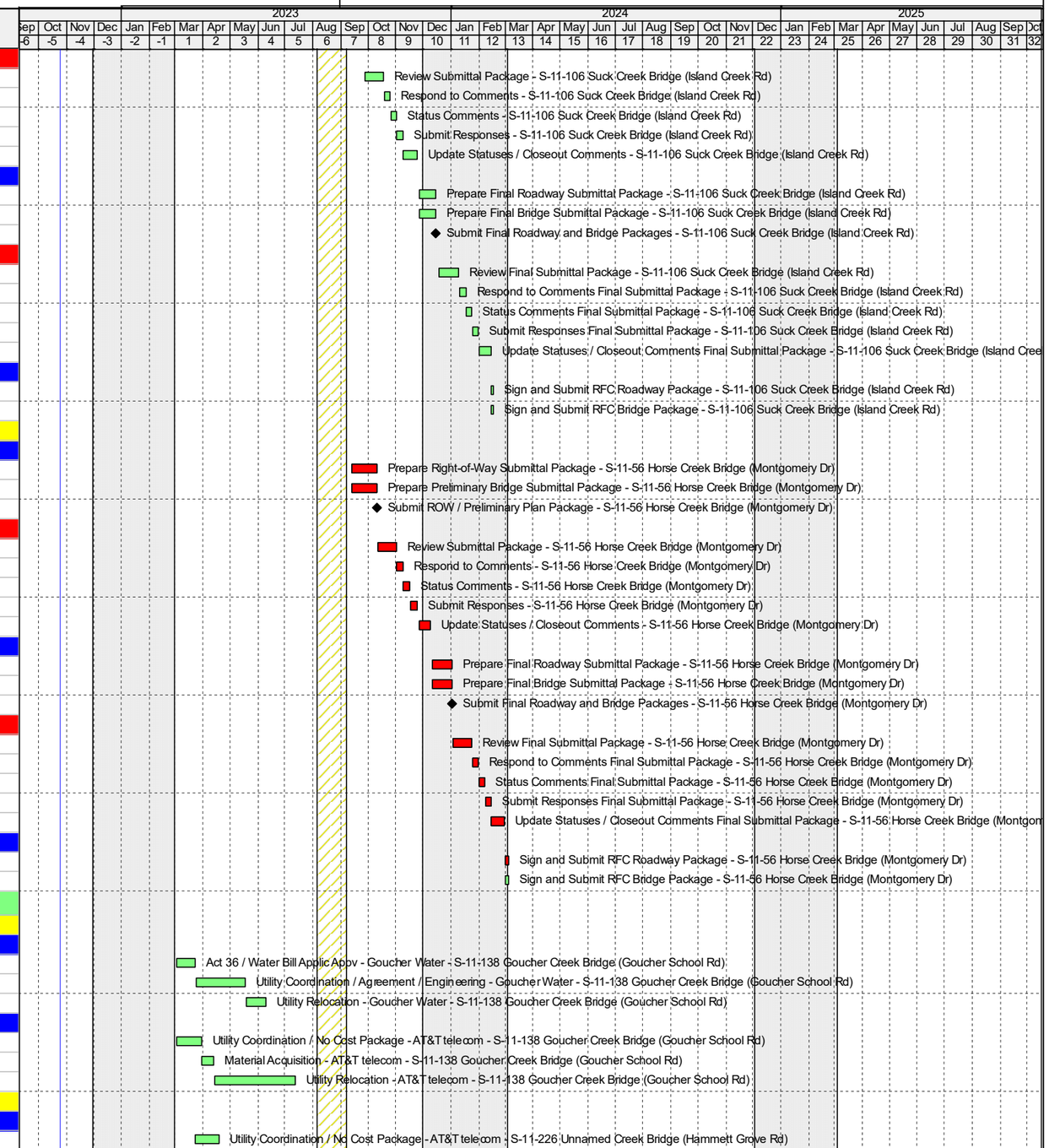

Remaining Level of Effort | Remaining Work | ◆ Milestone
Actual Work | Critical Remaining Work

Technical Proposal
Schedule

lane

SCDOT Bridge Package 14 DB Project Contract ID 1162220 - Cherokee County

Activity ID	Activity Name	Original Duration	Start	Finish
D3030	Material Acquisition - AT&T telecom - S-11-226 Unnamed Creek Bridge (Hammett Grove Rd)	10	20-Apr-23	03-May-23
D3040	Utility Relocation - AT&T telecom - S-11-226 Unnamed Creek Bridge (Hammett Grove Rd)	90	04-May-23	01-Aug-23
SR S-11-86 Kings Creek Bridge (Rock House Rd)		120	24-Apr-23	09-Nov-23
Broad River Electric		32	24-Apr-23	15-Jun-23
D3140	Utility Coordination / Agreement - Broad River Elec - S-11-86 Kings Creek Bridge (Rock House Rd)	10	24-Apr-23	05-May-23
D3150	Easement Acquisition - Broad River Elec - S-11-86 Kings Creek Bridge (Rock House Rd)	15	08-May-23	26-May-23
D3160	Utility Relocation - Broad River Elec - S-11-86 Kings Creek Bridge (Rock House Rd)	20	27-May-23	15-Jun-23
AT&T Telecom		79	24-Apr-23	03-Sep-23
D3110	Utility Coordination / No Cost Package - AT&T telecom - S-11-86 Kings Creek Bridge (Rock House Rd)	20	24-Apr-23	19-May-23
D3120	Material Acquisition - AT&T telecom - S-11-86 Kings Creek Bridge (Rock House Rd)	10	22-May-23	05-Jun-23
D3130	Utility Relocation - AT&T telecom - S-11-86 Kings Creek Bridge (Rock House Rd)	90	06-Jun-23	03-Sep-23
Duke Energy Transmission		40	14-Sep-23	09-Nov-23
D3170	Obtain "No Impact" Letter - Duke Energy - S-11-86 Kings Creek Bridge (Rock House Rd)	40	14-Sep-23	09-Nov-23
SR S-11-106 Suck Creek Bridge (Island Creek Rd)		74	27-Sep-23	01-Feb-24
Daniel Morgan WD - 4" Waterline		57	27-Sep-23	04-Jan-24
D3050	Act 36 / Water Bill Applic Appv - Daniel Morgan WD - S-11-106 Suck Creek Bridge (Island Creek Rd)	15	27-Sep-23	18-Oct-23
D3060	Utility Coordination / Agreement / Engineering - Danial Morgan WD - S-11-106 Suck Creek Bridge (Island Creek Rd)	40	19-Oct-23	15-Dec-23
D3070	Utility Relocation - Daniel Morgan WD - S-11-106 Suck Creek Bridge (Island Creek Rd)	20	16-Dec-23	04-Jan-24
Duke Energy		46	27-Sep-23	14-Dec-23
D3180	Utility Coordination / Agreement - Duke Energy - S-11-106 Suck Creek Bridge (Island Creek Rd)	15	27-Sep-23	18-Oct-23
D3190	Easement Acquisition - Duke Energy - S-11-106 Suck Creek Bridge (Island Creek Rd)	25	19-Oct-23	24-Nov-23
D3200	Utility Relocation - Duke Energy - S-11-106 Suck Creek Bridge (Island Creek Rd)	20	25-Nov-23	14-Dec-23
Comporium Telecom		56	27-Sep-23	03-Jan-24
D3210	Utility Coordination / No Cost Package - Comporium Telecom - S-11-106 Suck Creek Bridge (Island Creek Rd)	15	27-Sep-23	18-Oct-23
D3220	Material Acquisition - Comporium Telecom - S-11-106 Suck Creek Bridge (Island Creek Rd)	15	19-Oct-23	08-Nov-23
D3230	Utility Relocation - Comporium Telecom - S-11-106 Suck Creek Bridge (Island Creek Rd)	20	15-Dec-23	03-Jan-24
Charter/Spectrum Telecom		86	27-Sep-23	01-Feb-24
D3240	Utility Coordination / No Cost Package - Charter/Spectrum - S-11-106 Suck Creek Bridge (Island Creek Rd)	15	27-Sep-23	18-Oct-23
D3250	Material Acquisition - Charter/Spectrum - S-11-106 Suck Creek Bridge (Island Creek Rd)	15	19-Oct-23	08-Nov-23
D3260	Utility Relocation - Charter/Spectrum - S-11-106 Suck Creek Bridge (Island Creek Rd)	20	04-Jan-24	01-Feb-24
SR S-11-56 Horse Creek Bridge (Montgomery Dr)		59	12-Oct-23	22-Jan-24
Liberty Chesnee FWD - 3" waterline		59	12-Oct-23	22-Jan-24
D3080	Act 36 / Water Bill Applic Appv - Liberty Chesnee FWD - S-11-56 Horse Creek Bridge (Montgomery Dr)	15	12-Oct-23	01-Nov-23
D1190	Utility Coordination / Agreement / Engineering - Liberty Chesnee FWD - S-11-56 Horse Creek Bridge (Montgomery Dr)	40	02-Nov-23	02-Jan-24
D1200	Utility Relocation - Liberty Chesnee FWD - S-11-56 Horse Creek Bridge (Montgomery Dr)	20	03-Jan-24	22-Jan-24
Comporium Telecom		38	12-Oct-23	14-Dec-23
D3270	Utility Coordination / No Cost Package - Comporium Telecom - S-11-56 Horse Creek Bridge (Montgomery Dr)	15	12-Oct-23	01-Nov-23
D3280	Material Acquisition - Comporium Telecom - S-11-56 Horse Creek Bridge (Montgomery Dr)	15	02-Nov-23	24-Nov-23
D3290	Utility Relocation - Comporium Telecom - S-11-56 Horse Creek Bridge (Montgomery Dr)	20	25-Nov-23	14-Dec-23
RIGHT OF WAY		216	27-Apr-23	07-Mar-24
P1001	S-11-138 Goucher Creek Bridge (Goucher School Rd) (4 Parcels)	60	27-Apr-23	21-Jul-23
P1002	S-11-226 Unnamed Creek Bridge (Hammett Grove Rd) (5 Parcels)	60	18-May-23	11-Aug-23
P1003	S-11-86 Kings Creek Bridge (Rock House Rd) (XX Parcels)	60	20-Jun-23	13-Sep-23
P1004	S-11-106 Suck Creek Bridge (Island Creek Rd) (5 Parcels)	60	27-Nov-23	22-Feb-24
P1005	S-11-56 Horse Creek Bridge (Montgomery Dr) (4 Parcels)	60	11-Dec-23	07-Mar-24
PERMITTING		194	18-May-23	15-Apr-24
SR S-11-138 Goucher Creek Bridge (Goucher School Rd)		30	18-Jul-23	28-Aug-23
Land Disturbance Permit (NOI)		30	18-Jul-23	28-Aug-23
D2400	Prepare and Submit NOI Application & SWPPP - S-11-138 Goucher Creek Bridge (Goucher School Rd)	5	18-Jul-23	24-Jul-23
D2410	SCDOT to Submit NOI to DHEC - S-11-138 Goucher Creek Bridge (Goucher School Rd)	5	25-Jul-23	31-Jul-23
D2420	DHEC Review - S-11-138 Goucher Creek Bridge (Goucher School Rd)	15	01-Aug-23	21-Aug-23
D2430	Respond to DHEC Comments and Resubmit - S-11-138 Goucher Creek Bridge (Goucher School Rd)	5	22-Aug-23	28-Aug-23
D2440	Receive NOI Approval - S-11-138 Goucher Creek Bridge (Goucher School Rd)	0		28-Aug-23
SR S-11-226 Unnamed Creek Bridge (Hammett Grove Rd)		83	18-May-23	04-Oct-23
Land Disturbance Permit (NOI)		30	23-Aug-23	04-Oct-23

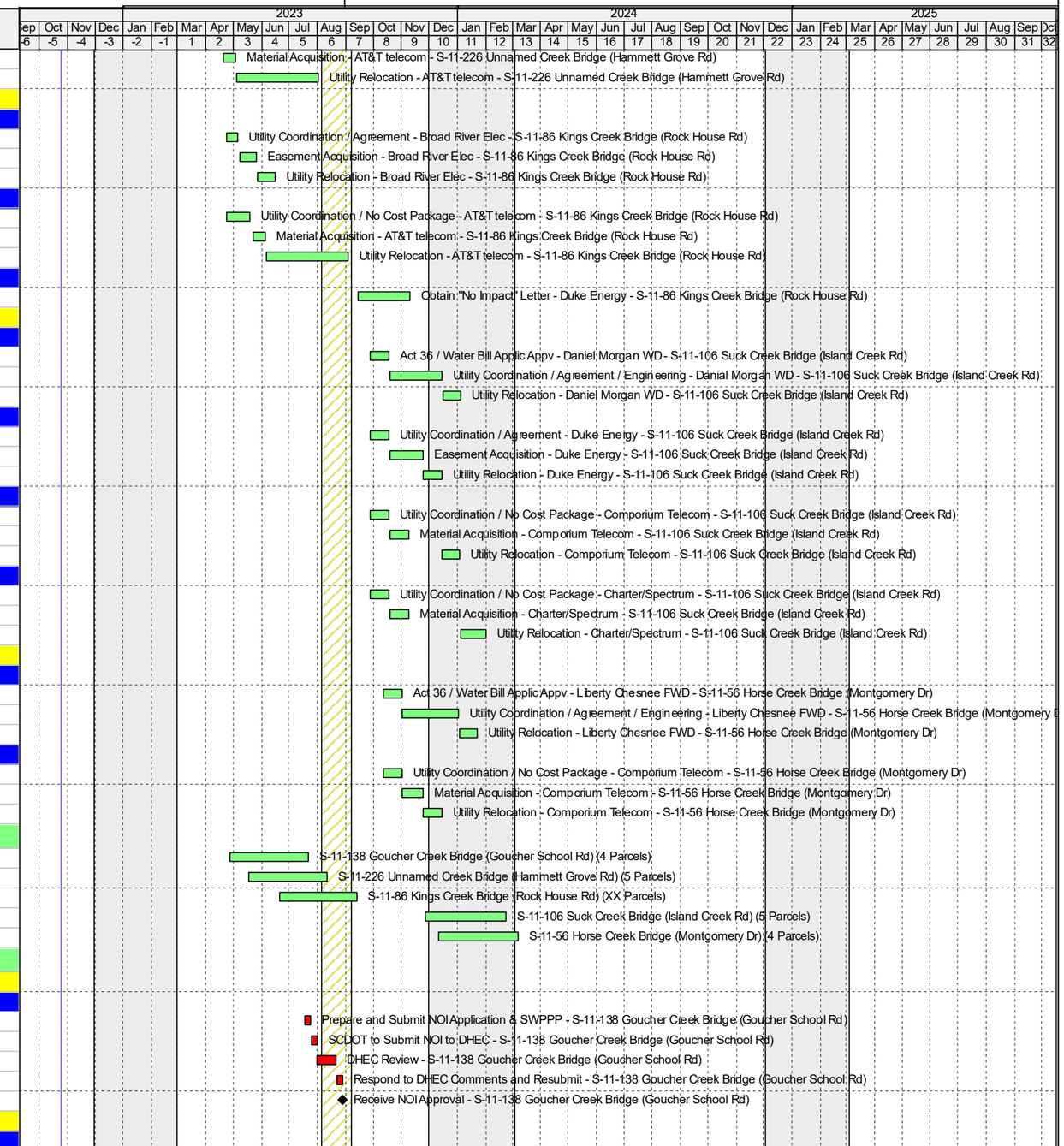

Remaining Level of Effort | Remaining Work | ◆ Milestone
Actual Work | Critical Remaining Work

Technical Proposal
Schedule

SCDOT Bridge Package 14 DB Project Contract ID 1162220 - Cherokee County

Activity ID	Activity Name	Original Duration	Start	Finish
D2350	Prepare and Submit NOI Application & SWPPP - S-11-226 Unnamed Creek Bridge (Hammett Grove Rd)	5	23-Aug-23	29-Aug-23
D2360	SCDOT to Submit NOI to DHEC - S-11-226 Unnamed Creek Bridge (Hammett Grove Rd)	5	30-Aug-23	06-Sep-23
D2370	DHEC Review - S-11-226 Unnamed Creek Bridge (Hammett Grove Rd)	15	07-Sep-23	27-Sep-23
D2380	Respond to DHEC Comments and Resubmit - S-11-226 Unnamed Creek Bridge (Hammett Grove Rd)	5	28-Sep-23	04-Oct-23
D2390	Receive NOI Approval - S-11-226 Unnamed Creek Bridge (Hammett Grove Rd)	0		04-Oct-23
USACE Permit		**59**	**18-May-23**	**25-Aug-23**
D2840	Prepare and Submit USACE Permit - S-11-226 Unnamed Creek Bridge (Hammett Grove Rd)	15	18-May-23	08-Jun-23
D2850	SCDOT Review USACE Permit - S-11-226 Unnamed Creek Bridge (Hammett Grove Rd)	5	09-Jun-23	15-Jun-23
D2860	Respond to SCDOT Comments and Submit to USACE Permit - S-11-226 Unnamed Creek Bridge (Hammett Grove Rd)	5	16-Jun-23	22-Jun-23
D2870	USACE Permit Review -S-11-226 Unnamed Creek Bridge (Hammett Grove Rd)	40	23-Jun-23	18-Aug-23
D2880	Respond to USACE Comments and Resubmit Permit - S-11-226 Unnamed Creek Bridge (Hammett Grove Rd)	5	21-Aug-23	25-Aug-23
D2890	Receive USACE Approval - S-11-226 Unnamed Creek Bridge (Hammett Grove Rd)	0		25-Aug-23
SR S-11-86 Kings Creek Bridge (Rock House Rd)		**30**	**25-Sep-23**	**06-Nov-23**
Land Disturbance Permit (NOI)		**30**	**25-Sep-23**	**06-Nov-23**
D2450	Prepare and Submit NOI Application & SWPPP - S-11-86 Kings Creek Bridge (Rock House Rd)	5	25-Sep-23	29-Sep-23
D2460	SCDOT to Submit NOI to DHEC - S-11-86 Kings Creek Bridge (Rock House Rd)	5	02-Oct-23	06-Oct-23
D2470	DHEC Review - S-11-86 Kings Creek Bridge (Rock House Rd)	15	09-Oct-23	30-Oct-23
D2480	Respond to DHEC Comments and Resubmit - S-11-86 Kings Creek Bridge (Rock House Rd)	5	31-Oct-23	06-Nov-23
D2490	Receive NOI Approval - S-11-86 Kings Creek Bridge (Rock House Rd)	0		06-Nov-23
SR S-11-106 Suck Creek Bridge (Island Creek Rd)		**73**	**27-Nov-23**	**01-Apr-24**
Land Disturbance Permit (NOI)		**30**	**20-Feb-24**	**01-Apr-24**
D2300	Prepare and Submit NOI Application & SWPPP - S-11-106 Suck Creek Bridge (Island Creek Rd)	5	20-Feb-24	26-Feb-24
D2310	SCDOT to Submit NOI to DHEC - S-11-106 Suck Creek Bridge (Island Creek Rd)	5	27-Feb-24	04-Mar-24
D2320	DHEC Review - S-11-106 Suck Creek Bridge (Island Creek Rd)	15	05-Mar-24	25-Mar-24
D2330	Respond to DHEC Comments and Resubmit - S-11-106 Suck Creek Bridge (Island Creek Rd)	5	26-Mar-24	01-Apr-24
D2340	Receive NOI Approval - S-11-106 Suck Creek Bridge (Island Creek Rd)	0		01-Apr-24
USACE Permit		**59**	**27-Nov-23**	**07-Mar-24**
D2900	Prepare and Submit USACE Permit - S-11-106 Suck Creek Bridge (Island Creek Rd)	15	27-Nov-23	15-Dec-23
D2910	SCDOT Review USACE Permit - S-11-106 Suck Creek Bridge (Island Creek Rd)	5	18-Dec-23	22-Dec-23
D2920	Respond to SCDOT Comments and Submit to USACE Permit - S-11-106 Suck Creek Bridge (Island Creek Rd)	5	26-Dec-23	02-Jan-24
D2930	USACE Permit Review - S-11-106 Suck Creek Bridge (Island Creek Rd)	40	03-Jan-24	29-Feb-24
D2940	Respond to USACE Comments and Resubmit Permit - S-11-106 Suck Creek Bridge (Island Creek Rd)	5	01-Mar-24	07-Mar-24
D2950	Receive USACE Approval - S-11-106 Suck Creek Bridge (Island Creek Rd)	0		07-Mar-24
SR S-11-56 Horse Creek Bridge (Montgomery Dr)		**30**	**05-Mar-24**	**15-Apr-24**
Land Disturbance Permit (NOI)		**30**	**05-Mar-24**	**15-Apr-24**
D2250	Prepare and Submit NOI Application & SWPPP - S-11-56 Horse Creek Bridge (Montgomery Dr)	5	05-Mar-24	11-Mar-24
D2260	SCDOT to Submit NOI to DHEC - S-11-56 Horse Creek Bridge (Montgomery Dr)	5	12-Mar-24	18-Mar-24
D2270	DHEC Review - S-11-56 Horse Creek Bridge (Montgomery Dr)	15	19-Mar-24	08-Apr-24
D2280	Respond to DHEC Comments and Resubmit - S-11-56 Horse Creek Bridge (Montgomery Dr)	5	09-Apr-24	15-Apr-24
D2290	Receive NOI Approval - S-11-56 Horse Creek Bridge (Montgomery Dr)	0		15-Apr-24
PROCUREMENT		**351**	**17-May-23**	**01-May-24**
P1010	Procurement - cored slab/box beams - S-11-138 Goucher Creek Bridge (Goucher School Rd)	120	17-May-23	13-Sep-23
P1020	Procurement - box beams - S-11-226 Unnamed Creek Bridge (Hammett Grove Rd)	120	23-Jun-23	20-Oct-23
P1050	Procurement - cored slab/box beams - S-11-86 Kings Creek Bridge (Rock House Rd)	120	26-Jul-23	22-Nov-23
P1040	Procurement - cored slabs - S-11-106 Suck Creek Bridge (Island Creek Rd)	120	16-Dec-23	13-Apr-24
P1030	Procurement - cored slabs - S-11-56 Horse Creek Bridge (Montgomery Dr)	120	03-Jan-24	01-May-24
PRELIMINARY ACTIVITIES		**297**	**07-Mar-23**	**29-Jul-24**
A0990	Establish /Assume Maint for Constr/Detour Signage - Closed Bridges (4 sites)	20	07-Mar-23	10-Apr-23
A3090	Begin Maintenance for Constr/Detour Signage - Closed Bridges (4 sites) - (04/16/23)	0		15-Apr-23
SR S-11-138 Traffic Control along Goucher School Rd		**232**	**11-Apr-23**	**28-Nov-23**
A1480	Maintain Construction/Detour Signage - S-11-138 Goucher Creek Bridge (Goucher School Rd)	232	11-Apr-23	28-Nov-23
A1490	Perform Patch Repairs to Detour Roadways as needed - S-11-138 Goucher Creek Bridge (Goucher School Rd)	232	11-Apr-23	28-Nov-23
SR S-11-86 Traffic Control along Rock House Rd		**368**	**11-Apr-23**	**12-Apr-24**
A2690	Maintain Construction/Detour Signage - S-11-86 Kings Creek Bridge (Rock House Rd)	368	11-Apr-23	12-Apr-24
A2700	Perform Patch Repairs to Detour Roadways as needed - S-11-86 Kings Creek Bridge (Rock House Rd)	368	11-Apr-23	12-Apr-24

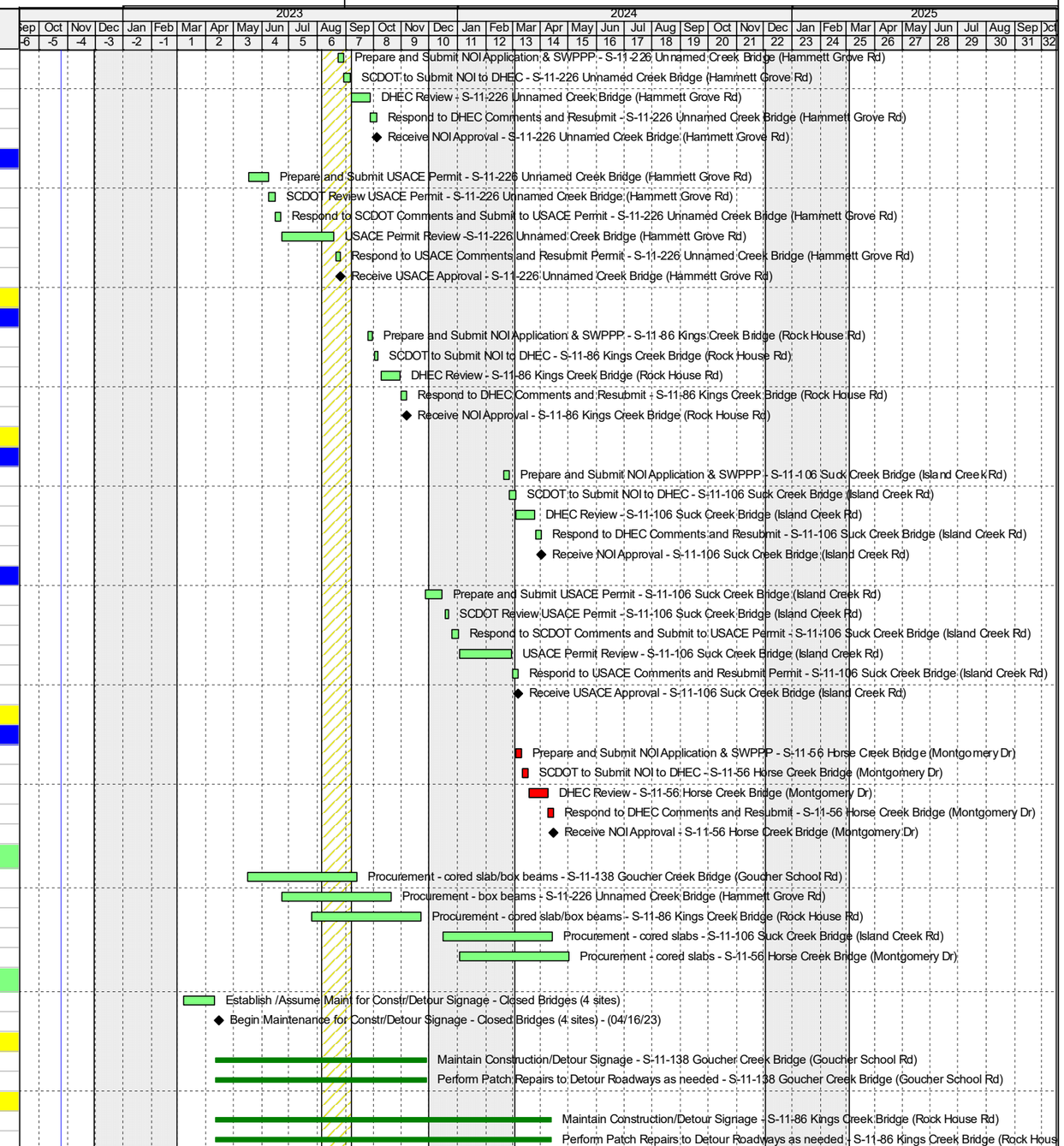

Remaining Level of Effort | Remaining Work | ◆ Milestone
Actual Work | Critical Remaining Work

Technical Proposal
Schedule

SCDOT Bridge Package 14 DB Project Contract ID 1162220 - Cherokee County

Activity ID	Activity Name	Original Duration	Start	Finish
SR S-11-106 Traffic Control along Island Creek Rd		437	11-Apr-23	20-Jun-24
A2310	Maintain Construction/Detour Signage - S-11-106 Suck Creek Bridge (Island Creek Rd)	437	11-Apr-23	20-Jun-24
A2320	Perform Patch Repairs to Detour Roadways as needed - S-11-106 Suck Creek Bridge (Island Creek Rd)	437	11-Apr-23	20-Jun-24
SR S-11-56 Traffic Control along Montgomery Rd		476	11-Apr-23	29-Jul-24
A1930	Maintain Construction/Detour Signage - S-11-56 Horse Creek Bridge (Montgomery Dr)	476	11-Apr-23	29-Jul-24
A1940	Perform Patch Repairs to Detour Roadways as needed - S-11-56 Horse Creek Bridge (Montgomery Dr)	476	11-Apr-23	29-Jul-24
CONSTRUCTION		304	02-Mar-23	02-Aug-24
Construction Milestones		340	29-Aug-23	02-Aug-24
A1120	Construction Start: S-11-138 Goucher Creek Bridge (Goucher School Rd) (180cd after NTP) (08/29/23)	0	29-Aug-23	
A1520	Construction Start: S-11-226 Unnamed Creek Bridge (Hammett Grove Rd) (30cd after Notice of Demo)	0	16-Nov-23	
A1140	Construction End: S-11-138 Goucher Creek Bridge (Goucher School Rd)	0		29-Nov-23
A2660	Construction Start: S-11-86 Kings Creek Bridge (Rock House Rd) (30cd after Notice of Demo)	0	22-Dec-23	
A1540	Construction End: S-11-226 Unnamed Creek Bridge (Hammett Grove Rd)	0		18-Mar-24
A2280	Construction Start: S-11-106 Suck Creek Bridge (Island Creek Rd) (30cd after Notice of Demo)	0	04-Apr-24	
A2680	Construction End: S-11-86 Kings Creek Bridge (Rock House Rd)	0		19-Apr-24
A1900	Construction Start: S-11-56 Horse Creek Bridge (Montgomery Dr) (30cd after Notice of Demo)	0	16-May-24	
A2300	Construction End: S-11-106 Suck Creek Bridge (Island Creek Rd)	0		27-Jun-24
A1920	Construction End: S-11-56 Horse Creek Bridge (Montgomery Dr)	0		02-Aug-24
Construction Durations		340	29-Aug-23	02-Aug-24
A1130	Construction Duration: S-11-138 Goucher Creek Bridge (Goucher School Rd) (180cd)	93	29-Aug-23	29-Nov-23
A1530	Construction Duration: S-11-226 Unnamed Creek Bridge (Hammett Grove Rd) (180cd)	124	16-Nov-23	18-Mar-24
A2670	Construction Duration: S-11-86 Kings Creek Bridge (Rock House Rd) (210cd)	120	22-Dec-23	19-Apr-24
A2290	Construction Duration: S-11-106 Suck Creek Bridge (Island Creek Rd) (120cd)	85	04-Apr-24	27-Jun-24
A1910	Construction Duration: S-11-56 Horse Creek Bridge (Montgomery Dr) (120cd)	79	16-May-24	02-Aug-24
SR S-11-138 Goucher Creek Bridge (Goucher School Rd) (180 CD)		161	02-Mar-23	29-Nov-23
A1100	Prep/Submit Notice of Demolition - S-11-138 Goucher Creek Bridge (Goucher School Rd)	150	02-Mar-23	29-Jul-23
A1110	SCDOT Reviews/Approves Notice of Demo - S-11-138 Goucher Creek Bridge (Goucher School Rd)	30	30-Jul-23	28-Aug-23
SR S-11-138 - Bridge Replacement over Goucher Creek		49	29-Aug-23	15-Nov-23
A1145	Site Mobe - S-11-138 Goucher Creek Bridge (Goucher School Rd)	2	29-Aug-23	30-Aug-23
A1150	Install Erosion Control - S-11-138 Goucher Creek Bridge (Goucher School Rd)	2	30-Aug-23	31-Aug-23
A1160	Clear & Grub - S-11-138 Goucher Creek Bridge (Goucher School Rd)	2	31-Aug-23	01-Sep-23
A1170	Demo/Remove existing Bridge - S-11-138 Goucher Creek Bridge (Goucher School Rd) -	5	31-Aug-23	07-Sep-23
A1210	Excavate at Slopes for new bridge foundations - S-11-138 Goucher Creek Bridge (Goucher School Rd)	3	08-Sep-23	12-Sep-23
A1220	Install Bridge Foundations (pile) - S-11-138 Goucher Creek Bridge (Goucher School Rd)	3	14-Sep-23	18-Sep-23
A1230	Install Bridge Foundations (drilled shafts) - S-11-138 Goucher Creek Bridge (Goucher School Rd)	10	14-Sep-23	28-Sep-23
A1240	Construct End Cap Abut 1 - S-11-138 Goucher Creek Bridge (Goucher School Rd)	3	19-Sep-23	21-Sep-23
A1245	Cure End Abut 1 - S-11-138 Goucher Creek Bridge (Goucher School Rd)	5	22-Sep-23	26-Sep-23
A1248	Construct End Earwall Abut 1 - S-11-138 Goucher Creek Bridge (Goucher School Rd)	3	22-Sep-23	26-Sep-23
A1260	Construct Cap - Interior Bent 2 - S-11-138 Goucher Creek Bridge (Goucher School Rd)	5	29-Sep-23	06-Oct-23
A1290	Construct End Cap Abut 3 - S-11-138 Goucher Creek Bridge (Goucher School Rd)	3	09-Oct-23	12-Oct-23
A1300	Cure End Abut 3 - S-11-138 Goucher Creek Bridge (Goucher School Rd)	5	13-Oct-23	17-Oct-23
A1295	Construct End Earwall Abut 3 - S-11-138 Goucher Creek Bridge (Goucher School Rd)	3	13-Oct-23	17-Oct-23
A1310	Erect Box Beams with tie rod - Span 1 - S-11-138 Goucher Creek Bridge (Goucher School Rd)	2	19-Oct-23	20-Oct-23
A1320	Erect Cored Slab with tie rod - Span 2 - S-11-138 Goucher Creek Bridge (Goucher School Rd)	2	23-Oct-23	24-Oct-23
A1255	Construct Approach Slab - Abut 1 - S-11-138 Goucher Creek Bridge (Goucher School Rd)	5	26-Oct-23	01-Nov-23
A1355	Install OH Brackets & Side Forms - Spans 1-2 - S-11-138 Goucher Creek Bridge (Goucher School Rd)	2	26-Oct-23	27-Oct-23
A1362	Grout Shear Keys - Span 1-2 - S-11-138 Goucher Creek Bridge (Goucher School Rd)	3	26-Oct-23	30-Oct-23
A1360	Construct MASH Barrier w/ Drain Slots - Spans 1-2 - S-11-138 Goucher Creek Bridge (Goucher School Rd)	5	30-Oct-23	03-Nov-23
A1315	Construct Approach Slab - Abut 3 - S-11-138 Goucher Creek Bridge (Goucher School Rd)	5	02-Nov-23	09-Nov-23
A1365	Apply Waterproofing to Deck - Spans 1-2 - S-11-138 Goucher Creek Bridge (Goucher School Rd)	5	06-Nov-23	13-Nov-23
A1370	Place Deck Asphalt - Spans 1-2 - S-11-138 Goucher Creek Bridge (Goucher School Rd)	2	14-Nov-23	15-Nov-23
SR S-11-138 - Roadway Improvements along Goucher School Rd		21	26-Oct-23	29-Nov-23
A1385	Grading - S-11-138 Goucher Creek Bridge (Goucher School Rd)	7	26-Oct-23	03-Nov-23
A1395	Install Drainage - S-11-138 Goucher Creek Bridge (Goucher School Rd)	3	02-Nov-23	06-Nov-23
A1400	Place/Finish Subgrade - S-11-138 Goucher Creek Bridge (Goucher School Rd)	3	06-Nov-23	09-Nov-23
A1410	Place HMAC base course - S-11-138 Goucher Creek Bridge (Goucher School Rd)	2	09-Nov-23	10-Nov-23

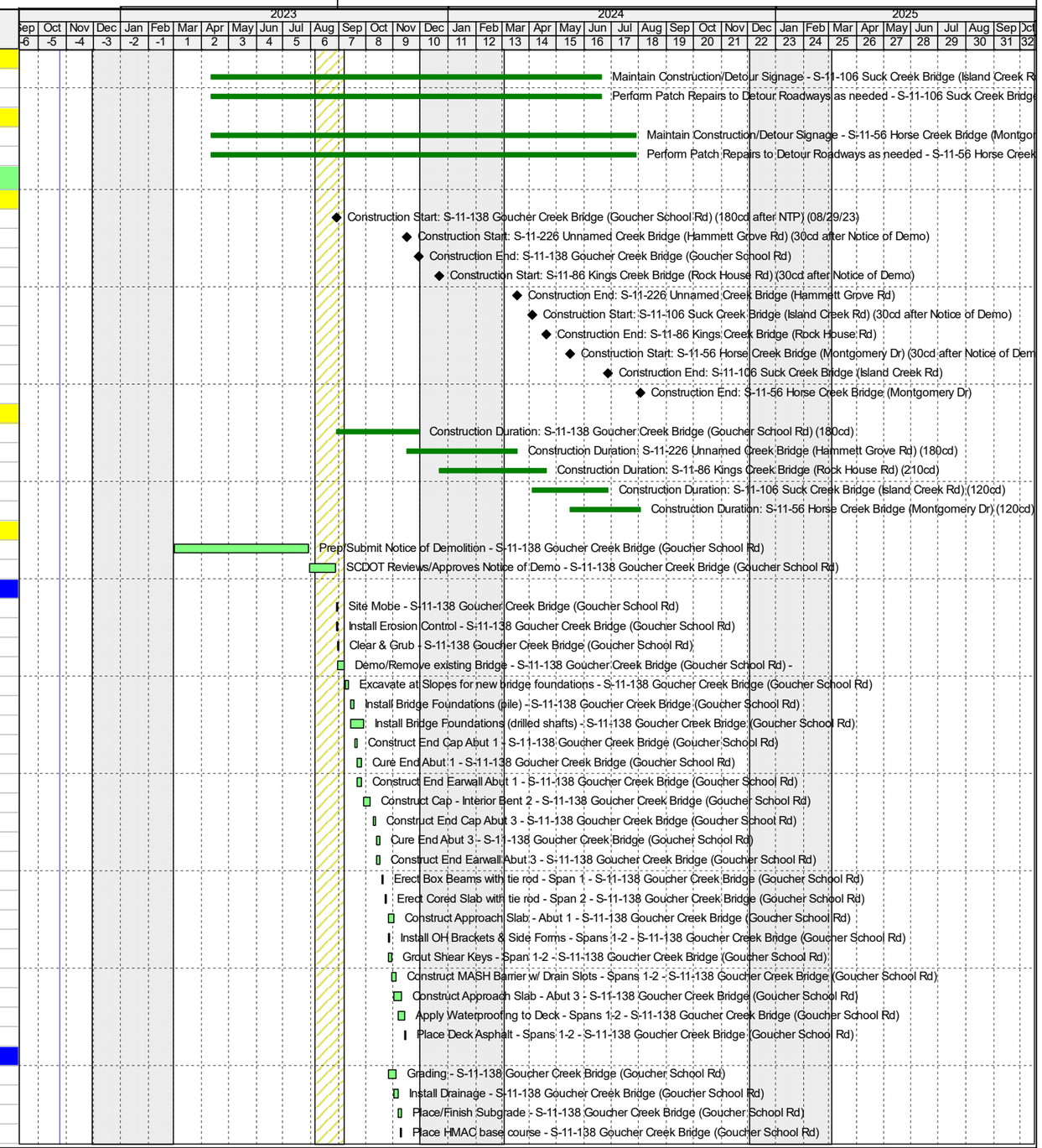

Remaining Level of Effort | Remaining Work | ◆ Milestone
Actual Work | Critical Remaining Work

Technical Proposal
Schedule

SCDOT Bridge Package 14 DB Project Contract ID 1162220 - Cherokee County

Activity ID	Activity Name	Original Duration	Start	Finish
A1420	Place HMAC surface course - S-11-138 Goucher Creek Bridge (Goucher School Rd)	2	16-Nov-23	17-Nov-23
A1430	Perm Striping / Rd Signs - S-11-138 Goucher Creek Bridge (Goucher School Rd)	2	20-Nov-23	21-Nov-23
A1425	Install Guardrail Systems - S-11-138 Goucher Creek Bridge (Goucher School Rd)	2	20-Nov-23	21-Nov-23
A1440	Finish Roadway Slopes - S-11-138 Goucher Creek Bridge (Goucher School Rd)	3	21-Nov-23	28-Nov-23
A1450	Apply Seed - S-11-138 Goucher Creek Bridge (Goucher School Rd)	2	27-Nov-23	28-Nov-23
A1460	Remove all Construction/Detour Signage - S-11-138 Goucher Creek Bridge (Goucher School Rd)	2	27-Nov-23	28-Nov-23
A1470	Open to Traffic - S-11-138 Goucher Creek Bridge (Goucher School Rd)	1	29-Nov-23	29-Nov-23
SR S-11-226 Unnamed Creek Bridge (Hammett Grove Rd) (180 CD)		**88**	**17-Oct-23**	**18-Mar-24**
A1500	Prep/Submit Notice of Demolition - S-11-226 Unnamed Creek Bridge (Hammett Grove Rd)	0	17-Oct-23	
A1510	Prep/Submit Notice of Closure - S-11-226 Unnamed Creek Bridge (Hammett Grove Rd)	0	17-Oct-23	
A1505	SCDOT Reviews/Approves Notice of Demo - S-11-226 Unnamed Creek Bridge (Hammett Grove Rd)	30	17-Oct-23	15-Nov-23
SR S-11-226 - Traffic Control along Hammett Grove Rd		**75**	**30-Oct-23**	**07-Mar-24**
A1542	Site Mobe - S-11-226 Unnamed Creek Bridge (Hammett Grove Rd)	2	30-Oct-23	31-Oct-23
A1545	Establish Construction/Detour Signage - S-11-226 Unnamed Creek Bridge (Hammett Grove Rd)	10	01-Nov-23	15-Nov-23
A1550	Maintain Construction/Detour Signage - S-11-226 Unnamed Creek Bridge (Hammett Grove Rd)	113	16-Nov-23	07-Mar-24
A1560	Perform Patch Repairs to Detour Roadways as needed - S-11-226 Unnamed Creek Bridge (Hammett Grove Rd)	113	16-Nov-23	07-Mar-24
A1548	Close Hammett Grove Rd for Bridge Replacement - S-11-226 Unnamed Creek Bridge (Hammett Grove Rd)	0	16-Nov-23	
SR S-11-226 - Bridge Replacement over Unnamed Stream		**38**	**14-Nov-23**	**19-Jan-24**
A1570	Install Erosion Control - S-11-226 Unnamed Creek Bridge (Hammett Grove Rd)	2	14-Nov-23	15-Nov-23
A1580	Clear & Grub - S-11-226 Unnamed Creek Bridge (Hammett Grove Rd)	2	16-Nov-23	17-Nov-23
A1590	Demo/Remove existing Bridge - S-11-226 Unnamed Creek Bridge (Hammett Grove Rd)	2	20-Nov-23	21-Nov-23
A1620	Excavate at Slopes for new bridge foundations - S-11-226 Unnamed Creek Bridge (Hammett Grove Rd)	3	27-Nov-23	29-Nov-23
A1630	Install Bridge Foundations (pile) - S-11-226 Unnamed Creek Bridge (Hammett Grove Rd)	3	30-Nov-23	04-Dec-23
A1640	Construct End Cap Abut 1 - S-11-226 Unnamed Creek Bridge (Hammett Grove Rd)	3	05-Dec-23	08-Dec-23
A1650	Cure End Abut 1 - S-11-226 Unnamed Creek Bridge (Hammett Grove Rd)	5	09-Dec-23	13-Dec-23
A1645	Construct End Earwall Abut 1 - S-11-226 Unnamed Creek Bridge (Hammett Grove Rd)	3	11-Dec-23	14-Dec-23
A1670	Construct End Cap Abut 2 - S-11-226 Unnamed Creek Bridge (Hammett Grove Rd)	3	15-Dec-23	19-Dec-23
A1680	Cure End Abut 2 - S-11-226 Unnamed Creek Bridge (Hammett Grove Rd)	5	20-Dec-23	24-Dec-23
A1675	Construct End Earwall Abut 2 - S-11-226 Unnamed Creek Bridge (Hammett Grove Rd)	3	20-Dec-23	27-Dec-23
A1700	Erect Cored Slab with tie rod - Span 1 - S-11-226 Unnamed Creek Bridge (Hammett Grove Rd)	2	28-Dec-23	29-Dec-23
A1660	Construct Approach Slab - Abut 1 - S-11-226 Unnamed Creek Bridge (Hammett Grove Rd)	5	02-Jan-24	08-Jan-24
A1740	Grout Shear Keys - Span 1 - S-11-226 Unnamed Creek Bridge (Hammett Grove Rd)	2	02-Jan-24	03-Jan-24
A1720	Install OH Brackets & Side Forms - Span 1 - S-11-226 Unnamed Creek Bridge (Hammett Grove Rd)	2	02-Jan-24	03-Jan-24
A1730	Construct MASH Barrier w/ Drain Slots - Span 1 - S-11-226 Unnamed Creek Bridge (Hammett Grove Rd)	5	04-Jan-24	11-Jan-24
A1690	Construct Approach Slab - Abut 2 - S-11-226 Unnamed Creek Bridge (Hammett Grove Rd)	5	09-Jan-24	17-Jan-24
A1750	Apply Waterproofing to Deck - Span 1 - S-11-226 Unnamed Creek Bridge (Hammett Grove Rd)	3	12-Jan-24	17-Jan-24
A1760	Place Deck Asphalt - Span 1 - S-11-226 Unnamed Creek Bridge (Hammett Grove Rd)	2	18-Jan-24	19-Jan-24
SR S-11-226 - Roadway Improvements along Hammett Grove Rd		**45**	**02-Jan-24**	**18-Mar-24**
A1780	Grading - S-11-226 Unnamed Creek Bridge (Hammett Grove Rd)	7	02-Jan-24	11-Jan-24
A1790	Install Drainage - S-11-226 Unnamed Creek Bridge (Hammett Grove Rd)	3	12-Jan-24	17-Jan-24
A1800	Place/Finish Subgrade - S-11-226 Unnamed Creek Bridge (Hammett Grove Rd)	3	18-Jan-24	22-Jan-24
A1810	Place HMAC base course - S-11-226 Unnamed Creek Bridge (Hammett Grove Rd)	2	22-Jan-24	23-Jan-24
A1820	Place HMAC surface course - S-11-226 Unnamed Creek Bridge (Hammett Grove Rd)	2	01-Mar-24	04-Mar-24
A1830	Perm Striping / Rd Signs - S-11-226 Unnamed Creek Bridge (Hammett Grove Rd)	2	05-Mar-24	07-Mar-24
A835	Install Guardrail Systems - S-11-226 Unnamed Creek Bridge (Hammett Grove Rd)	2	05-Mar-24	07-Mar-24
A1840	Finish Roadway Slopes - S-11-226 Unnamed Creek Bridge (Hammett Grove Rd)	3	08-Mar-24	12-Mar-24
A1860	Remove all Construction/Detour Signage - S-11-226 Unnamed Creek Bridge (Hammett Grove Rd)	2	08-Mar-24	11-Mar-24
A1850	Apply Seed - S-11-226 Unnamed Creek Bridge (Hammett Grove Rd)	2	14-Mar-24	15-Mar-24
A1870	Open to Traffic - S-11-226 Unnamed Creek Bridge (Hammett Grove Rd)	1	18-Mar-24	18-Mar-24
SR S-11-86 Kings Creek Bridge (Rock House Rd) (210 CD)		**84**	**22-Nov-23**	**19-Apr-24**
A2640	Prep/Submit Notice of Demolition - S-11-86 Kings Creek Bridge (Rock House Rd)	0	22-Nov-23	
A2645	SCDOT Reviews/Approves Notice of Demo - S-11-86 Kings Creek Bridge (Rock House Rd)	30	22-Nov-23	21-Dec-23
SR S-11-86 - Bridge Replacement over Kings Creek		**59**	**18-Dec-23**	**29-Mar-24**
A2715	Site Mobe - S-11-86 Kings Creek Bridge (Rock House Rd)	2	18-Dec-23	19-Dec-23
A2710	Install Erosion Control - S-11-86 Kings Creek Bridge (Rock House Rd)	2	20-Dec-23	26-Dec-23
A2720	Clear & Grub - S-11-86 Kings Creek Bridge (Rock House Rd)	2	27-Dec-23	28-Dec-23

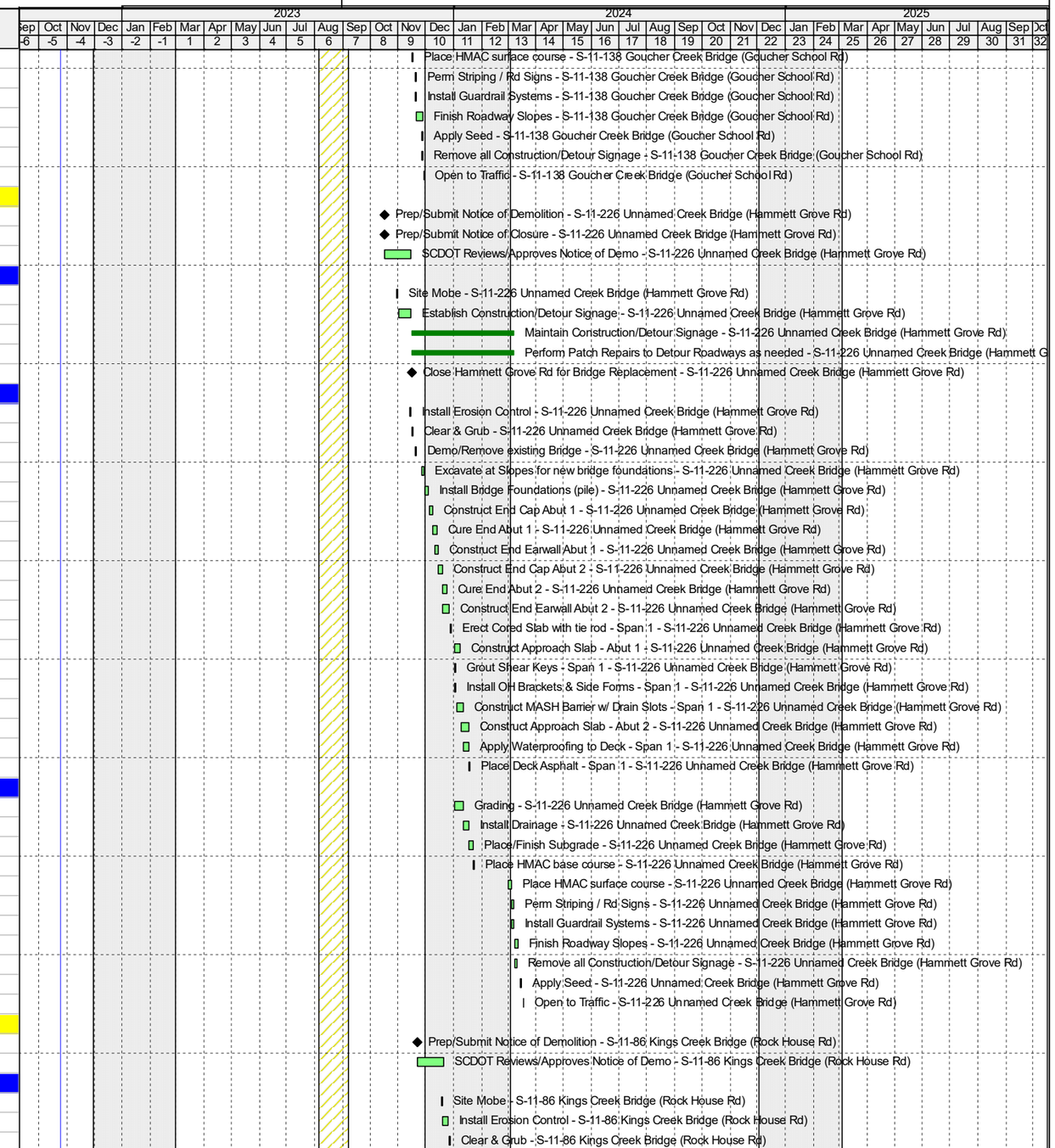

Remaining Level of Effort | Remaining Work | ◆ Milestone
Actual Work | Critical Remaining Work

Technical Proposal
Schedule

lane

SCDOT Bridge Package 14 DB Project Contract ID 1162220 - Cherokee County

Activity ID	Activity Name	Original Duration	Start	Finish
A2730	Demo/Remove existing Bridge - S-11-86 Kings Creek Bridge (Rock House Rd)	5	29-Dec-23	05-Jan-24
A2750	Excavate at Slopes for new bridge foundations - S-11-86 Kings Creek Bridge (Rock House Rd)	3	08-Jan-24	11-Jan-24
A2760	Install Bridge Foundations (pile) - S-11-86 Kings Creek Bridge (Rock House Rd)	5	12-Jan-24	19-Jan-24
A2770	Install Bridge Foundations (drilled shafts) - S-11-86 Kings Creek Bridge (Rock House Rd)	10	12-Jan-24	29-Jan-24
A2780	Construct End Cap Abut 1 - S-11-86 Kings Creek Bridge (Rock House Rd)	3	30-Jan-24	01-Feb-24
A2785	Cure End Abut 1 - S-11-86 Kings Creek Bridge (Rock House Rd)	5	02-Feb-24	06-Feb-24
A2788	Construct End Earwall Abut 1 - S-11-86 Kings Creek Bridge (Rock House Rd)	3	02-Feb-24	06-Feb-24
A2810	Construct Cap - Interior Bent 2 - S-11-86 Kings Creek Bridge (Rock House Rd)	5	08-Feb-24	15-Feb-24
A2840	Construct End Cap Abut 3 - S-11-86 Kings Creek Bridge (Rock House Rd)	3	16-Feb-24	20-Feb-24
A2848	Construct End Earwall Abut 3 - S-11-86 Kings Creek Bridge (Rock House Rd)	3	22-Feb-24	26-Feb-24
A2845	Cure End Abut 3 - S-11-86 Kings Creek Bridge (Rock House Rd)	5	24-Feb-24	28-Feb-24
A2860	Erect Box Beams with tie-rod - Span 1 - S-11-86 Kings Creek Bridge (Rock House Rd)	2	29-Feb-24	01-Mar-24
A2880	Erect Cored Slab with tie-rod - Span 2 - S-11-86 Kings Creek Bridge (Rock House Rd)	2	04-Mar-24	05-Mar-24
A2790	Construct Approach Slab - Abut 1 - S-11-86 Kings Creek Bridge (Rock House Rd)	5	07-Mar-24	14-Mar-24
A2930	Grout Shear Keys - Spans 1-2 - S-11-86 Kings Creek Bridge (Rock House Rd)	3	07-Mar-24	11-Mar-24
A2915	Install OH Brackets & Side Forms - Spans 1-2 - S-11-86 Kings Creek Bridge (Rock House Rd)	2	07-Mar-24	08-Mar-24
A2920	Construct MASH Barrier w/ Drain Slots - Spans 1-2 - S-11-86 Kings Creek Bridge (Rock House Rd)	5	11-Mar-24	18-Mar-24
A2850	Construct Approach Slab - Abut 3 - S-11-86 Kings Creek Bridge (Rock House Rd)	5	15-Mar-24	22-Mar-24
A2940	Apply Waterproofing to Deck - Spans 1-2 - S-11-86 Kings Creek Bridge (Rock House Rd)	5	19-Mar-24	26-Mar-24
A2950	Place Deck Asphalt - Spans 1-2 - S-11-86 Kings Creek Bridge (Rock House Rd)	2	28-Mar-24	29-Mar-24
SR S-11-86 - Roadway Improvements along Rock House Rd		**26**	**07-Mar-24**	**19-Apr-24**
A2970	Grading - S-11-86 Kings Creek Bridge (Rock House Rd)	7	07-Mar-24	18-Mar-24
A2980	Install Drainage - S-11-86 Kings Creek Bridge (Rock House Rd)	3	19-Mar-24	22-Mar-24
A2990	Place/Finish Subgrade - S-11-86 Kings Creek Bridge (Rock House Rd)	3	25-Mar-24	28-Mar-24
A3000	Place HMAC base course - S-11-86 Kings Creek Bridge (Rock House Rd)	2	01-Apr-24	02-Apr-24
A3010	Place HMAC surface course - S-11-86 Kings Creek Bridge (Rock House Rd)	2	03-Apr-24	04-Apr-24
A3020	Perm Striping / Rd Signs - S-11-86 Kings Creek Bridge (Rock House Rd)	2	08-Apr-24	09-Apr-24
A3030	Install Guardrail Systems - S-11-86 Kings Creek Bridge (Rock House Rd)	2	08-Apr-24	09-Apr-24
A3040	Finish Roadway Slopes - S-11-86 Kings Creek Bridge (Rock House Rd)	3	11-Apr-24	15-Apr-24
A3050	Remove all Construction/Detour Signage - S-11-86 Kings Creek Bridge (Rock House Rd)	2	11-Apr-24	12-Apr-24
A3060	Apply Seed - S-11-86 Kings Creek Bridge (Rock House Rd)	2	16-Apr-24	18-Apr-24
A3070	Open to Traffic - S-11-86 Kings Creek Bridge (Rock House Rd)	1	19-Apr-24	19-Apr-24
SR S-11-106 Suck Creek Bridge (Island Creek Rd) (120 CD)		**67**	**05-Mar-24**	**27-Jun-24**
A2260	Prep/Submit Notice of Demolition - S-11-106 Suck Creek Bridge (Island Creek Rd)	0	05-Mar-24	
A2265	SCDOT Reviews/Approves Notice of Demo - S-11-106 Suck Creek Bridge (Island Creek Rd)	30	05-Mar-24	03-Apr-24
SR S-11-106 - Bridge Replacement over Suck Creek		**38**	**02-Apr-24**	**04-Jun-24**
A2325	Site Mobe - S-11-106 Suck Creek Bridge (Island Creek Rd)	2	02-Apr-24	03-Apr-24
A2330	Install Erosion Control - S-11-106 Suck Creek Bridge (Island Creek Rd)	2	04-Apr-24	08-Apr-24
A2340	Clear & Grub - S-11-106 Suck Creek Bridge (Island Creek Rd)	2	09-Apr-24	11-Apr-24
A2350	Demo/Remove existing Bridge - S-11-106 Suck Creek Bridge (Island Creek Rd)	2	12-Apr-24	15-Apr-24
A2360	Excavate at Slopes for new bridge foundations - S-11-106 Suck Creek Bridge (Island Creek Rd)	3	16-Apr-24	19-Apr-24
A2370	Install Bridge Foundations (pile) - S-11-106 Suck Creek Bridge (Island Creek Rd)	3	22-Apr-24	25-Apr-24
A2400	Construct End Cap Abut 1 - S-11-106 Suck Creek Bridge (Island Creek Rd)	3	26-Apr-24	28-Apr-24
A2410	Cure End Abut 1 - S-11-106 Suck Creek Bridge (Island Creek Rd)	5	29-Apr-24	03-May-24
A2405	Construct End Earwall Abut 1 - S-11-106 Suck Creek Bridge (Island Creek Rd)	3	29-Apr-24	01-May-24
A2440	Construct End Cap Abut 2 - S-11-106 Suck Creek Bridge (Island Creek Rd)	3	02-May-24	06-May-24
A2450	Cure End Abut 2 - S-11-106 Suck Creek Bridge (Island Creek Rd)	5	07-May-24	11-May-24
A2445	Construct End Earwall Abut 2 - S-11-106 Suck Creek Bridge (Island Creek Rd)	3	07-May-24	10-May-24
A2470	Erect Cored Slab with tie-rod - Span 1 - S-11-106 Suck Creek Bridge (Island Creek Rd)	2	13-May-24	14-May-24
A2420	Construct Approach Slab - Abut 1 - S-11-106 Suck Creek Bridge (Island Creek Rd)	5	16-May-24	23-May-24
A2510	Grout Shear Keys - Span 1 - S-11-106 Suck Creek Bridge (Island Creek Rd)	2	16-May-24	17-May-24
A2490	Install OH Brackets & Side Forms - Span 1 - S-11-106 Suck Creek Bridge (Island Creek Rd)	2	16-May-24	17-May-24
A2500	Construct MASH Barrier w/ Drain Slots - Span 1 - S-11-106 Suck Creek Bridge (Island Creek Rd)	5	20-May-24	28-May-24
A2460	Construct Approach Slab - Abut 2 - S-11-106 Suck Creek Bridge (Island Creek Rd)	5	24-May-24	31-May-24
A2520	Apply Waterproofing to Deck - Span 1 - S-11-106 Suck Creek Bridge (Island Creek Rd)	3	29-May-24	31-May-24
A2530	Place Deck Asphalt - Span 1 - S-11-106 Suck Creek Bridge (Island Creek Rd)	2	03-Jun-24	04-Jun-24

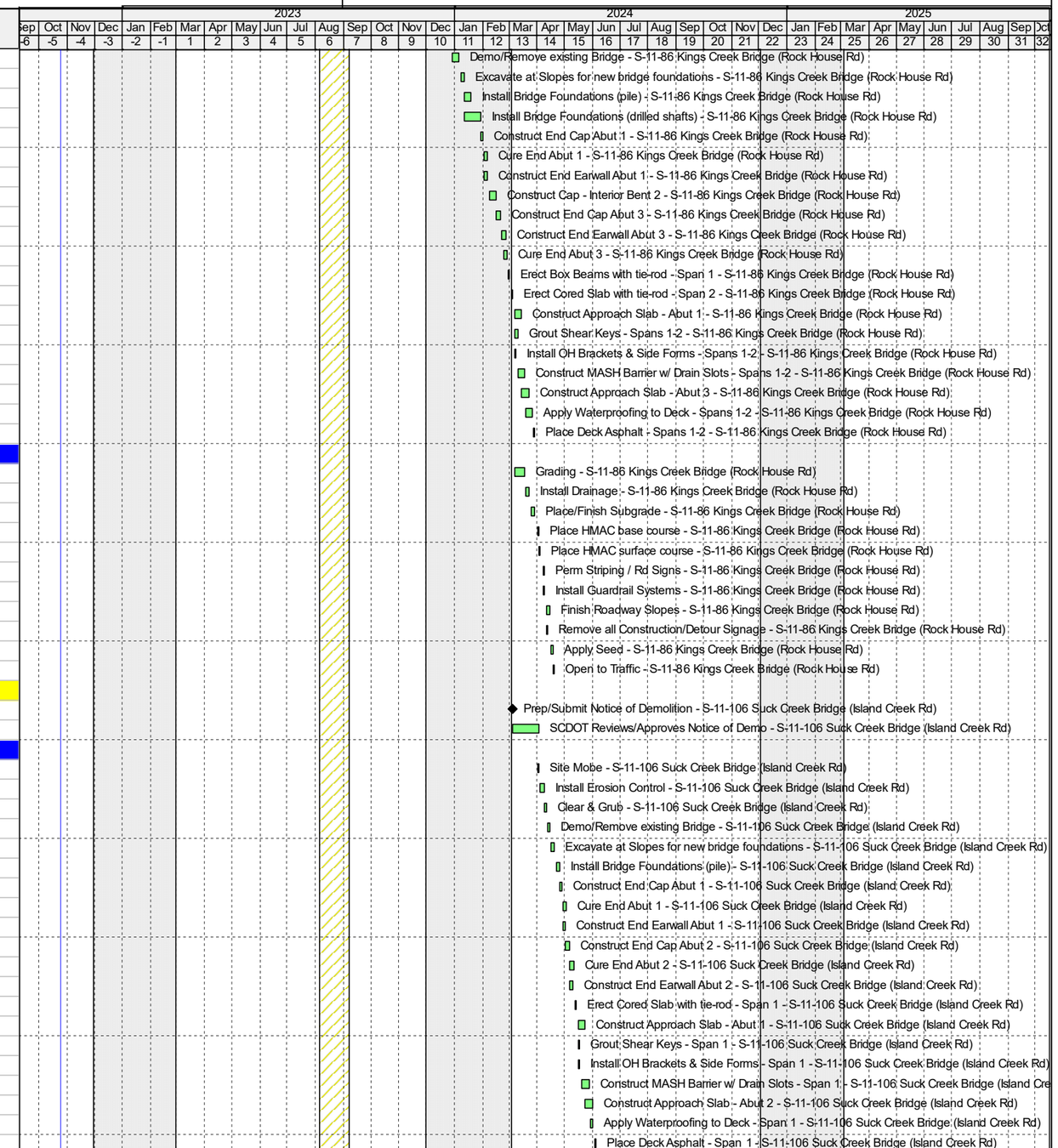

Remaining Level of Effort | Remaining Work | ◆ Milestone
Actual Work | Critical Remaining Work

Technical Proposal
Schedule

SCDOT Bridge Package 14 DB Project Contract ID 1162220 - Cherokee County

Activity ID	Activity Name	Original Duration	Start	Finish
SR S-11-106 - Roadway Improvements along Island Creek Rd		**25**	**16-May-24**	**27-Jun-24**
A2545	Grading - S-11-106 Suck Creek Bridge (Island Creek Rd)	7	16-May-24	28-May-24
A2550	Install Drainage - S-11-106 Suck Creek Bridge (Island Creek Rd)	3	29-May-24	31-May-24
A2560	Place/Finish Subgrade - S-11-106 Suck Creek Bridge (Island Creek Rd)	3	03-Jun-24	06-Jun-24
A2570	Place HMAC base course - S-11-106 Suck Creek Bridge (Island Creek Rd)	2	07-Jun-24	10-Jun-24
A2580	Place HMAC surface course - S-11-106 Suck Creek Bridge (Island Creek Rd)	2	11-Jun-24	13-Jun-24
A2590	Perm Striping / Rd Signs - S-11-106 Suck Creek Bridge (Island Creek Rd)	2	14-Jun-24	17-Jun-24
A2595	Install Guardrail Systems - S-11-106 Suck Creek Bridge (Island Creek Rd)	2	14-Jun-24	17-Jun-24
A2600	Finish Roadway Slopes - S-11-106 Suck Creek Bridge (Island Creek Rd)	3	18-Jun-24	21-Jun-24
A2620	Remove all Construction/Detour Signage - S-11-106 Suck Creek Bridge (Island Creek Rd)	2	18-Jun-24	20-Jun-24
A2610	Apply Seed - S-11-106 Suck Creek Bridge (Island Creek Rd)	2	24-Jun-24	25-Jun-24
A2630	Open to Traffic - S-11-106 Suck Creek Bridge (Island Creek Rd)	1	27-Jun-24	27-Jun-24
SR S-11-56 Horse Creek Bridge (Montgomery Dr) (120 CD)		**65**	**16-Apr-24**	**02-Aug-24**
A1880	Prep/Submit Notice of Demolition - S-11-56 Horse Creek Bridge (Montgomery Dr)	0	16-Apr-24	
A1885	SCDOT Reviews/Approves Notice of Demo - S-11-56 Horse Creek Bridge (Montgomery Dr)	30	16-Apr-24	15-May-24
SR S-11-56 - Bridge Replacement over Horse Creek		**42**	**06-May-24**	**16-Jul-24**
A1945	Site Mobe - S-11-56 Horse Creek Bridge (Montgomery Dr)	2	06-May-24	07-May-24
A1950	Install Erosion Control - S-11-56 Horse Creek Bridge (Montgomery Dr)	2	09-May-24	10-May-24
A1960	Clear & Grub - S-11-56 Horse Creek Bridge (Montgomery Dr)	2	13-May-24	14-May-24
A1970	Demo/Remove existing Bridge - S-11-56 Horse Creek Bridge (Montgomery Dr)	2	16-May-24	17-May-24
A2000	Excavate at Slopes for new bridge foundations - S-11-56 Horse Creek Bridge (Montgomery Dr)	3	20-May-24	23-May-24
A2010	Install Bridge Foundations (pile / drilled shafts) - S-11-56 Horse Creek Bridge (Montgomery Dr)	3	24-May-24	29-May-24
A2020	Construct End Cap Abut 1 - S-11-56 Horse Creek Bridge (Montgomery Dr)	3	30-May-24	03-Jun-24
A2025	Cure End Abut 1 - S-11-56 Horse Creek Bridge (Montgomery Dr)	5	04-Jun-24	08-Jun-24
A2028	Construct End Earwall Abut 1 - S-11-56 Horse Creek Bridge (Montgomery Dr)	3	04-Jun-24	07-Jun-24
A2040	Construct End Cap Abut 2 - S-11-56 Horse Creek Bridge (Montgomery Dr)	3	10-Jun-24	13-Jun-24
A2048	Construct End Earwall Abut 2 - S-11-56 Horse Creek Bridge (Montgomery Dr)	3	14-Jun-24	18-Jun-24
A2045	Cure End Abut 2 - S-11-56 Horse Creek Bridge (Montgomery Dr)	5	18-Jun-24	22-Jun-24
A2060	Erect Cored Slab with tie rod - Span 1 - S-11-56 Horse Creek Bridge (Montgomery Dr)	2	24-Jun-24	25-Jun-24
A2030	Construct Approach Slab - Abut 1 - S-11-56 Horse Creek Bridge (Montgomery Dr)	5	27-Jun-24	03-Jul-24
A2100	Grout Shear Keys - Span 1 - S-11-56 Horse Creek Bridge (Montgomery Dr)	2	27-Jun-24	28-Jun-24
A2080	Install OH Brackets & Side Forms - Span 1 - S-11-56 Horse Creek Bridge (Montgomery Dr)	2	27-Jun-24	28-Jun-24
A2090	Construct MASH Barrier w/ Drain Slots - Span 1 - S-11-56 Horse Creek Bridge (Montgomery Dr)	5	01-Jul-24	08-Jul-24
A2050	Construct Approach Slab - Abut 2 - S-11-56 Horse Creek Bridge (Montgomery Dr)	5	05-Jul-24	12-Jul-24
A2110	Apply Waterproofing to Deck - Span 1 - S-11-56 Horse Creek Bridge (Montgomery Dr)	3	09-Jul-24	12-Jul-24
A2120	Place Deck Asphalt - Span 1 - S-11-56 Horse Creek Bridge (Montgomery Dr)	2	15-Jul-24	16-Jul-24
SR S-11-56 - Roadway Improvements along Montgomery Rd		**23**	**27-Jun-24**	**02-Aug-24**
A2140	Grading - S-11-56 Horse Creek Bridge (Montgomery Dr)	7	27-Jun-24	08-Jul-24
A2150	Install Drainage - S-11-56 Horse Creek Bridge (Montgomery Dr)	3	05-Jul-24	09-Jul-24
A2180	Place/Finish Subgrade - S-11-56 Horse Creek Bridge (Montgomery Dr)	3	11-Jul-24	15-Jul-24
A2190	Place HMAC base course - S-11-56 Horse Creek Bridge (Montgomery Dr)	2	16-Jul-24	18-Jul-24
A2200	Place HMAC surface course - S-11-56 Horse Creek Bridge (Montgomery Dr)	2	19-Jul-24	22-Jul-24
A2210	Perm Striping / Rd Signs - S-11-56 Horse Creek Bridge (Montgomery Dr)	2	23-Jul-24	25-Jul-24
A2215	Install Guardrail Systems - S-11-56 Horse Creek Bridge (Montgomery Dr)	2	23-Jul-24	25-Jul-24
A2220	Finish Roadway Slopes - S-11-56 Horse Creek Bridge (Montgomery Dr)	3	26-Jul-24	30-Jul-24
A2240	Remove all Construction/Detour Signage - S-11-56 Horse Creek Bridge (Montgomery Dr)	2	26-Jul-24	29-Jul-24
A2230	Apply Seed - S-11-56 Horse Creek Bridge (Montgomery Dr)	2	31-Jul-24	01-Aug-24
A2250	Open to Traffic - S-11-56 Horse Creek Bridge (Montgomery Dr)	1	02-Aug-24	02-Aug-24

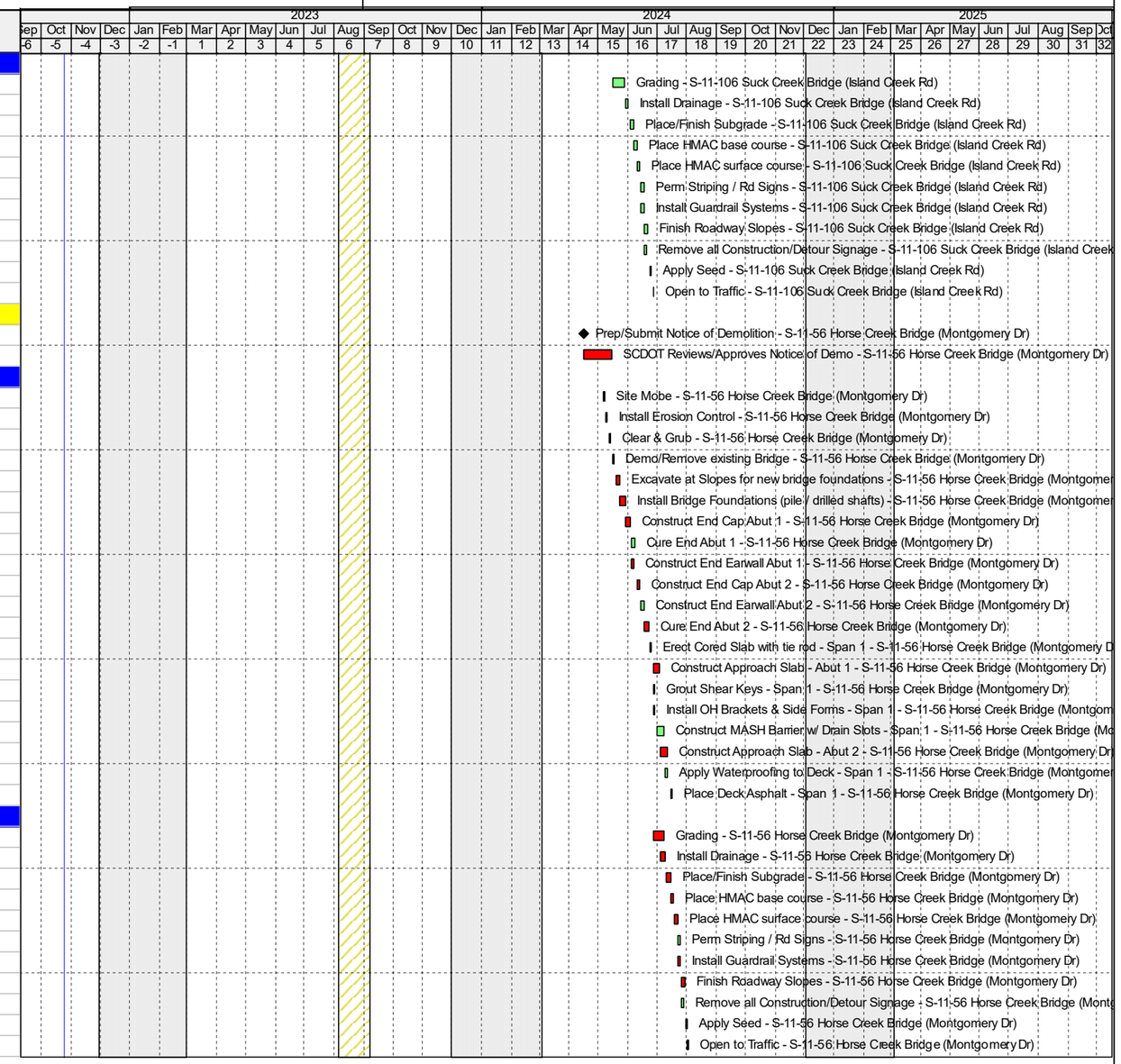

Remaining Level of Effort | Remaining Work | ◆ Milestone
Actual Work | Critical Remaining Work

Technical Proposal
Schedule

REQUIRED FORMS

APPENDIX B

12. STIPEND ACKNOWLEDGEMENT FORM

Stipend Acknowledgement Form

Bridge Package 14
Cherokee County

Proposer: The Lane Construction Corporation

ADDRESS: 90 Fieldstone Court, Cheshire, CT 06410

The undersigned Proposer, hereby:

☐ Waives the stipend for this Project.

☑ Accepts the stipend for this Project.

By accepting the stipend for this Project, Proposer agrees:

1) to execute and include the Stipend Agreement in Article XIII of the RFP with its RFP response;

2) to submit an invoice with FEIN number for the stipend amount to the SCDOT POC after SCDOT's posting of the Notice of Award on SCDOT's Design-Build Website.;

3) to transfer all rights to its Work Product used to develop the Proposal as of the date of this acknowledgement. "Work Product" " means all submittals, including ATCs, ideas, innovations, solutions, methods, processes, design concepts, materials, electronic files, marked up drawings, cross sections, quantity lists and intellectual property, made by Proposer during the RFP process, including the Proposal, exchange of information during the pre-Proposal and post-Proposal period.

SCDOT will pay the stipend to each eligible unsuccessful Proposer, who has signed a Stipend Agreement, within ninety (90) days after execution of the Contract or the decision to not award a contract.

10/17/2022
Date

Proposer

Ignacio Botella
Print Name

13. STIPEND AGREEMENT

STIPEND AGREEMENT
Project ID: 1162220
Bridge Package 14
Cherokee County

THIS STIPEND AGREEMENT (the "Agreement") is made and entered into as of the ___ day of October, 20_, by and between the SOUTH CAROLINA DEPARTMENT OF TRANSPORTATION (hereinafter "SCDOT"), and The Lane Construction Corporation ("Proposer"), with reference to the following facts:

SCDOT issued a Request for Proposal ("RFP") for design and construction of the above-referenced Design-Build Project ("Project"), pursuant to procurement authority granted in Section 57-5-1625 of the S.C. Code of Laws, 1976, as amended. The RFP provided for payment of stipends as provided herein. Capitalized terms used, but not defined, have the meanings ascribed in the RFP.

NOW, THEREFORE, Proposer hereby agrees as follows:

1. Work Product.

1.1 Proposer shall prepare and submit a responsible and responsive Technical Proposal and Cost Proposal that conforms in all material respects to the requirements and provisions of the RFP, as determined by SCDOT, and are timely received by SCDOT in accordance with the RFP Milestone Schedule.

1.2 By signing this Stipend Agreement, Proposer agrees to transfer full and complete ownership to SCDOT of all Work Product. The Work Product (as defined below) shall become the property of SCDOT without restriction or limitation on its use, without further compensation or consideration, and can be used in connection with this Project or any future projects by SCDOT. Neither Proposer nor any of its team members shall copyright any of the material developed under this Agreement.

1.3 The term "Work Product" shall mean the Proposal and all material, electronic files, marked up drawings, cross sections, quantity lists, submittals, alternative technical concepts (ATC), ideas, innovations, solutions, methods, processes, design concepts, Trade Secrets or confidential information, and intellectual property, made by or produced for Proposer in the development and submission of the Technical and Cost Proposal, including exchanges of information during the pre-Proposal and post-Proposal period.

2. Compensation and Payment.

2.1 A stipend to Proposer for the Work Product described herein shall be $25,000.00 and is payable to Proposer that was determined to be responsible and (1) submitted a responsive Technical Proposal and responsive Cost Proposal to the RFP which is not selected for award of this Project, or (2) was awarded the Contract but the Contract was terminated by SCDOT for convenience after the Submittal of Proposal Due Date (See Final RFP Milestone schedule) but prior to the Notice to Proceed #1. Responsibility of Proposers and responsiveness of the Technical Proposal and Cost Proposal will be determined by SCDOT as a condition of payment.

2.2 SCDOT will pay the stipend to Proposer as follows, subject (as applicable) to the following conditions:

(a) Proposer has submitted this signed Stipend Agreement, unchanged with its response to the RFP.

(b) After posting of the Notice of Award on SCDOT's Design-Build Website, Proposer has submitted to SCDOT an invoice, with FEIN Number, for the Stipend amount.

(c) After execution of the Contract or the decision not to award a contract, SCDOT will pay the invoice for the stipend amount to the unsuccessful Proposer meeting the criteria of Section 2.1 within 90 calendar days of receipt of the invoice from Proposer.

(d) If the procurement is suspended or cancelled prior to the Proposal Due Date (see FINAL RFP Milestone schedule), no stipend will be paid to Proposer.

(e) After the submittal of Proposals, but prior to award, if the procurement is cancelled, all Proposers that provide a responsive Technical Proposal and Cost Proposal to the final RFP and submitted a signed Stipend Agreement with their RFP shall receive the stipend

(f) In the event of a Best and Final Offer, only one stipend will be paid to each Proposer that executed a Stipend Agreement and met the other criteria and conditions herein.

(g) No stipends will be paid for submitting RFQ responses.

(h) No stipends will be paid to a Proposer who withdraws at any time from this procurement.

2.3 Acceptance by the Proposer of payment of the stipend amount from SCDOT shall constitute a waiver by Proposer of any and all right, equitable or otherwise, to bring any claim in connection with this procurement, procurement process, award of the Contract, or cancellation of this procurement.

2.4 The Proposer awarded the contract shall be not eligible to receive a stipend.

2.5 If Proposer elects to waive payment of the stipend, SCDOT will not use the ideas or information contained in that Proposer's Proposal for this Project. However, the Proposer's Proposal will be subject to the South Carolina Freedom of Information Act.

3. Indemnities.

3.1 Subject to the limitations contained in Section 3.2, Proposer shall indemnify, protect and hold harmless SCDOT and its directors, officers, employees and contractors from, and Proposer shall defend at its own expense, all claims, costs, expenses, liabilities, demands, or suits at law or equity arising, in whole or in part, from the negligence or willful misconduct of Proposer or any of its agents, officers, employees, representatives or subcontractors or breach of any of Proposer's obligations under this Agreement.

3.2 This indemnity shall not apply with respect to any claims, demands or suits arising from use of the Work Product by SCDOT.

4. Compliance With Laws.

4.1 Proposer shall comply with all federal, state, and local laws, ordinances, rules, and regulations applicable to the work performed or paid for under this Agreement and covenants and agrees that it and its employees shall be bound by the standards of conduct provided in applicable laws, ordinances, rules, and regulations as they relate to work performed under this Agreement. Proposer agrees to incorporate the provisions of this paragraph in any subcontract into which it might enter with reference to the work performed pursuant to this Agreement.

4.2 The Proposer agrees (a) not to discriminate in any manner against an employee or applicant for employment because of race, color, religion, creed, age, sex, marital status, national origin, ancestry or disability of a qualified individual with a disability; (b) to include a provision similar to that contained in subsection (a) in any subcontract; and (c) to post and to cause subcontractors to post in conspicuous places available to employees and applicants for employment, notices setting forth the substance of this clause.

5. Assignment.

Proposer shall not assign this Agreement without SCDOT's prior written consent. Any assignment of this Agreement without such consent shall be null and void.

6. Miscellaneous.

6.1 Proposer and SCDOT agree that Proposer, its team members, and their respective employees are not agents of SCDOT as a result of this Agreement.

6.2 This Agreement, together with the RFP, as amended from time to time, the provisions of which are incorporated herein by reference, embodies the entire agreement of the parties. There are no promises, terms, conditions, or obligations other than those contained herein or in the RFP, and this Agreement shall supersede all previous communications, representation, or agreements, either oral or written, between the parties hereto.

6.3 It is understood and agreed by the parties hereto that if any part, term, or provision of this Agreement is by the courts held to be illegal or in conflict with any law of the State of South Carolina, the validity of the remaining portions or provisions shall not be affected, and the rights and obligations of the parties shall be construed and enforced as if the Agreement did not contain the particular part, term, or provisions to be invalid.

6.4 This Agreement shall be governed by and construed in accordance with the laws of the State of South Carolina.

IN WITNESS WHEREOF, the parties have executed this Agreement as of the date first written above.

Witness:

_____

Recommended:

_____
{INSERT NAME}
Alternative Delivery Program Manager

Witness:

_____

SOUTH CAROLINA DEPARTMENT
OF TRANSPORATION

By: _____
{INSERT NAME}
Alternative Delivery Engineer

Proposer

The Lane Construction Corporation
Name of Proposer

By: _____

Its: President and CEO

11. EQUAL EMPLOYMENT OPPORTUNITY CERTIFICATION

(COMPLETE THIS SECTION FOR FEDERAL PROJECTS ONLY)
EQUAL EMPLOYMENT OPPORTUNITY PERFORMANCE

Select the Certification that applies to the PROPOSER:

Certification (1) [✓] or Certification (2) [ ]

Select the appropriate responses in the applicable Certification:

Certification (1): Pursuant to 41 C.F.R. §60-1.7(b)(1), Previous Equal Employment Opportunity Performance Certification, as the Prospective Prime Contractor, I HEREBY CERTIFY THAT I:

(a) **(HAVE / HAVE NOT)** developed and filed an Affirmative Action Program pursuant to 41C.F.R. §60-2 and/or 60-4;

(b) **(HAVE / HAVE NOT)** participated in a previous contract or subcontract subject to the equal opportunity clause;

(c) **(HAVE / HAVE NOT)** filed with the Joint Reporting Committee, the Director of Office of Federal Contract Compliance, or the Equal Employment Opportunity Commission, all reports due under the applicable filing requirements,

OR

Certification (2): I, HEREBY CERTIFY that as the Prospective Prime Contractor submitting this Proposal, **(CLAIM / DO NOT CLAIM)** exemption from the submission of the Standard Form 100 (EEO-1) due to the fact that it employs a total of less than fifty (50) employees under C.F.R. §60-1.7, or qualifies for an exempted status under 41 C.F.R. §60-1.5.

I FURTHER CERTIFY that the above Certification will be made part of any Subcontract Agreement, or other agreement involved with this project.

Executed on 10/17, 2022 .

Signed: _____
(Officer/PROPOSER)

Title: President & Chief Executive Officer

Company: The Lane Construction Corporation

Address: 90 Fieldstone Court, Cheshire, CT 06410

Note: The above certification is required by the Equal Employment Opportunity Regulations of the Secretary of Labor (41 CFR 60-1.7(b)(1)), and must be submitted by PROPOSERS only in connection with contracts which are subject to the equal opportunity clause. Contracts that are exempt from the equal opportunity clause are set forth in 41 CFR 60-1.5. (Generally, only contracts of $10,000 or under are exempt.)

Currently, Standard Form 100 (EEO-1) is the only report required by Executive Orders or their implementing regulations.

Proposers, Primary Members, or proposed Subcontractors (any tier) and Consultants who have participated in a previous contract subject to the Executive Orders and have not filed the required reports shall note that 41 CFR 60-1.7(b)(1) prevents the award of contracts and subcontracts unless such contractor submits a report covering the delinquent period or such other period specified by the Federal Highway Administration or by the Director, Office of Federal Contract Compliance, U.S. Department of Labor.

10. NON-COLLUSION CERTIFICATION

NON-COLLUSION CERTIFICATION

Project ID: 1162220

IN ACCORDANCE WITH THE PROVISIONS OF S.C. CODE ANN. §§ 39-3-10 ET.SEQ., 39-5-10 ET. SEQ., 15 U.S.C. §45; 23 C.F.R. §635.112(F); AND 28 U.S.C. §1746, I HEREBY ACKNOWLEDGE THAT I AM AN OFFICER OF THE PROPOSER FIRM AND, UNDER PENALTY OF PERJURY UNDER THE LAWS OF THE UNITED STATES AND SOUTH CAROLINA, DECLARE, BY MY CERTIFICATION BELOW, THAT THE FOLLOWING IS TRUE AND CORRECT, AND FURTHER, THAT THIS JOINT-VENTURE, FIRM, PARTNERSHIP, ASSOCIATION OR CORPORATION, OR ANY OTHER LEGAL ENTITY HAS NOT, EITHER DIRECTLY OR INDIRECTLY, ENTERED INTO ANY AGREEMENT, PARTICIPATED IN ANY COLLUSION, OR OTHERWISE TAKEN ANY ACTION IN RESTRAINT OF FREE COMPETITIVE BIDDING IN CONNECTION WITH THE SUBMISSION OF A BID PROPOSAL ON THE ABOVE REFERENCED PROJECT.

BY CHECKING THIS BOX ☑, I CERTIFY THAT I HAVE READ, UNDERSTAND, ACCEPT, AND ACKNOWLEDGE ALL OF THE ABOVE STATEMENTS.

Executed on 10/17/2022
(Date)

Signed: JPBotelle
(Officer/Proposer)

President & Chief Executive Officer
(Title)

90 Fieldstone Court Cheshire, CT 06410
(Address)

South Carolina
Department of Transportation

NOTICE TO PROPOSERS

Bridge Package 14
Design-Build – Contract ID 1162220
Cherokee County

September 15, 2022

NOTICE TO PROPOSERS - Enclosed is **Addendum 1** to the Request for Proposals (RFP) for the Bridge Package 14 design-build project. The information provided in this notice and the addendum shall be made part of the contract documents.

The yellow highlights identify the revisions associated with Addendum 1.

This addendum is being issued in order to provide clarification and additional information for the project. The following sections of the RFP contain revisions:

- Request for Proposals Instructions – Title Page
- Agreement – IV. Contract Time, Act 36 language, XVIII. DBE revision
- Exhibit 4a – Roadway Design Criteria – 2.15 Right-of-Way
- Exhibit 4e – Hydraulic Design Criteria – Section 2.2.1.8

Post Office Box 191
Columbia, South Carolina 29202-0191

Phone: (803) 737-2314
TTY: (803) 737-3870

AN EQUAL OPPORTUNITY
AFFIRMATIVE ACTION EMPLOYER

South Carolina
Department of Transportation

NOTICE OF RECEIPT

Bridge Package 14
Design-Build – Contract ID 1162220
Cherokee County

Addendum 1

The information in this addendum shall be made part of the contract documents. PROPOSERS are instructed to incorporate the information into the previously provided RFP documents.

PROPOSERS are required to sign this document and enclose it with their Technical Proposal. Receipt of this signed document by The South Carolina Department of Transportation serves as confirmation that the PROPOSER has received and incorporated this Addendum into the contract documents.

Confirmation Statement:

I, the PROPOSER confirm that I have received this addendum package and have incorporated the information provided in the addendum into the contract documents.

PROPOSER's Signature

10/17/2022
Date

Ignacio Botella
Printed Name

For: The Lane Construction Corporation
Design-Build Team Name

South Carolina
Department of Transportation

NOTICE TO PROPOSERS

Bridge Package 14
Design-Build – Contract ID 1162220
Cherokee County

October 13, 2022

NOTICE TO PROPOSERS - Enclosed is **Addendum 2** to the Request for Proposals (RFP) for the Bridge Package 14 design-build project. The information provided in this notice and the addendum shall be made part of the contract documents.

The yellow highlights identify the revisions associated with Addendum 1. The green highlights identify the revisions associated with Addendum 1.

This addendum is being issued in order to provide clarification and additional information for the project. The following sections of the RFP contain revisions:

- Request for Proposals Instructions – Title Page, Section 4.1 Technical Proposal appendices
- Agreement – Section IV.A.1.c - Contract Time
- Project Information Package –
  - Roadway (3. S106 Present ROW 101122.dgn"
- Attachment B –
  - Hydro (R1_Minimum Bridge Length_Package14)

South Carolina
Department of Transportation

NOTICE OF RECEIPT

Bridge Package 14
Design-Build – Contract ID 1162220
Cherokee County

Addendum 2

The information in this addendum shall be made part of the contract documents. PROPOSERS are instructed to incorporate the information into the previously provided RFP documents.

PROPOSERS are required to sign this document and enclose it with their Technical Proposal. Receipt of this signed document by The South Carolina Department of Transportation serves as confirmation that the PROPOSER has received and incorporated this Addendum into the contract documents.

Confirmation Statement:

I, the PROPOSER confirm that I have received this addendum package and have incorporated the information provided in the addendum into the contract documents.

PROPOSER's Signature

10/17/2022
Date

Ignacio Botella
Printed Name

For: The Lane Construction Corporation
Design-Build Team Name

NO CHANGES

SCDOT

Executive Management
Lane & ICE

SCDOT RCE (D4)

PROJECT MANAGER
Jeffrey Dean Nichols, Jr. Lane

Quality Management / Construction QC Team
ICE

Safety
Lane

Public Relations
ICE

Project, Subcontractor & Supplier Administration
LANE

ASSISTANT PROJECT MANAGER
Matthew Reed Miltner, PE Lane

PRE-CONSTRUCTION TEAM

LEAD DESIGN ENGINEER
Warren Ray Spence, Jr. PE ICE

Structural Engineering
ICE

Roadway Engineering
ICE

Hydraulic Engineering
ICE

Geotech Engineering
ICE & STE (drilling)

Utility Coordination
ICE

Pre-Design Surveys
ICE

ROW Acquisition Services
COL

Environmental Compliance / Permitting
ICE / Palustrine Group

Design Quality Review Team (DQRT)
ICE
(Structures, Geotech, Roadway, Hydrology/Hydraulic)

CONSTRUCTION TEAM

CONSTRUCTION MANAGER
Donato Aguirre Mondragon Lane

Bridge & Demolition Superintendents
Lane

Construction Engineers / Surveyors
Lane

Utility Coordination
ICE / Lane

Grading & Drainage Superintendents
Lane

Major Subcontractors
Paving

Specialty Subcontractors
Traffic Control, Erosion Control, Signs, Guardrail, Pavement Markings, Rebar, Barrier, Grooving

FIRM LEGEND

Construction
Lane – The Lane Construction Corporation
Design
ICE – Infrastructure Consulting & Engineering, PLLC
STE – SubTerra Exploration, LLC
COL – Collier Engineering & Design/Masur Consulting, Inc.
PG – Palustrine Group

Statement of Availability

On behalf of direct employer The Lane Construction Corporation, the undersigned states that the Key Individual, **Project Manager Jeffrey D. Nichols, Jr.,** identified in the Team Organizational Chart as Project Manager for the Bridge Package 14 Design-Build Project, will be available, barring any unforeseen circumstances, at the earliest of the times and durations identified in the RFQ and RFP until expiration of the Warranty Period, or such earlier date as the Contract is terminated or SCDOT releases, in writing, such Key Individual from this requirement.

Signed this 13th day of October 2022

David J. Rankin, Vice President, Construction
The Lane Construction Corporation

Co-Signed

Jeffrey D. Nichols, Jr, Project Manager
The Lane Construction Corporation

Statement of Availability

On behalf of direct employer The Lane Construction Corporation, the undersigned states that the Key Individual, **Assistant Project Manager Matthew Reed Miltner, PE,** identified in the Team Organizational Chart as Assistant Project Manager for the Bridge Package 14 Design-Build Project, will be available, barring any unforeseen circumstances, at the earliest of the times and durations identified in the RFQ and RFP until expiration of the Warranty Period, or such earlier date as the Contract is terminated or SCDOT releases, in writing, such Key Individual from this requirement.

Signed this 13th day of October 2022

David J. Rankin, Vice President, Construction
The Lane Construction Corporation

Co-Signed

Jeffrey D. Nichols, Jr, Project Manager
The Lane Construction Corporation

Statement of Availability

On behalf of direct employer Infrastructure Consulting & Engineering, PLLC the undersigned states that the Key Individual, **Lead Design Engineer, Ray Spence, PE** identified in the Team Organizational Chart as Lead Design Engineer for the Bridge Package 14 Design-Build Project, will be available, barring any unforeseen circumstances, at the earliest of the times and durations identified in the RFQ and RFP until expiration of the Warranty Period, or such earlier date as the Contract is terminated or SCDOT releases, in writing, such Key Individual from this requirement.

Signed this 13th day of October 2022

Elham Farzam, President & CEO
Infrastructure Consulting & Engineering, PLLC

Co-Signed

Jeffrey D. Nichols, Jr, Project Manager
The Lane Construction Corporation

Statement of Availability

On behalf of direct employer The Lane Construction Corporation, the undersigned states that the Key Individual, **Construction Manager Donato Aguirre Mondragon,** identified in the Team Organizational Chart as Construction Manager for the Bridge Package 14 Design-Build Project, will be available, barring any unforeseen circumstances, at the earliest of the times and durations identified in the RFQ and RFP until expiration of the Warranty Period, or such earlier date as the Contract is terminated or SCDOT releases, in writing, such Key Individual from this requirement.

Signed this 13th day of October 2022

David J. Rankin, Vice President, Construction
The Lane Construction Corporation

Co-Signed

Jeffrey D. Nichols, Jr, Project Manager
The Lane Construction Corporation

Confidential and Proprietary Information Page List

There are no elements of this Technical Proposal that are considered confidential or proprietary.

South Carolina Department of Transportation

Columbia, South Carolina

SOUTH CAROLINA DEPARTMENT OF TRANSPORTATION

PRIME CONTRACTOR

PREQUALIFICATION CERTIFICATE

This Certifies that your company has complied with the rules and regualtions of the Department and the State of South Carolina, and subject to the rules and regulations for a prime contractor, is declared eligible to submit a bid and be awarded any construction contract issued by the Department, subject to obtaining proper bonds and insurance acceptable to the Department and complying with all other statutory and contract requirements.

All BIDS SUBMITTED TO THE DEPARTMENT MUST BE IN THE NAME AS SHOWN BELOW.

THE LANE CONSTRUCTION CORPORATION

Vendor ID: **1TH013**

Issued : **October 18, 2022**

Expires: **October 31, 2023**

Approved By: Maria A. Donito
Prequalification Coordinator

SCDOT FORM CERT-JANUARY 8, 2019

Quality Credit Matrix

Number	Description	Added Value/Benefits	Cost/Schedule Impacts	Self-imposed Assurance
1	Reduced ROW compared to SCDOT Conceptual Design	Our Team's design requires 0.594 acres (20%) less ROW.	Estimated savings of $10,000	It is in the Lane/ICE Team's best interest to maintain this reduction in ROW, as additional ROW would be the result of additional earthwork associated in final design.
2	Use of longer span at S-138 over Goucher Creek	a) Eliminates interior bent b) Improves hydraulic conveyance and reduces scour potential c) Reduces drift build up and the need for maintenance crews to clear accumulated drift debris d) Reduces the number of locations for potential joints, bearing assemblies, and overall elements considered as maintenance items for SCDOT	Accelerates schedule by 10 days Estimated savings of $80,000	This approach enables our Team to submit the most cost-effective design. Our price proposal will include the savings associated with this design, so we consider this a contractual requirement that is part of the Agreement.
3	FATC 1 (eliminate skew) + Use of Longer Span at S-86 over Kings Creek	a) Eliminates interior bent b) Improves hydraulic conveyance and reduces scour potential c) Reduces drift build up and the need for maintenance crews to clear accumulated drift debris d) Reduces the number of locations for potential joints, bearing assemblies, and overall elements considered as maintenance items for SCDOT	Accelerates schedule by 10 days Estimated savings of $80,000	This FATC allows our Team to submit the most cost-effective design. Our price proposal will include the savings associated with this FATC, so we consider this a contractual requirement that is part of the Agreement.
4	Asphalt on bridge decks will be saw cut transversely at each bent location, and joints will be sealed with cold applied joint filler	Controls joint cracking and spalling of asphalt, reducing the long-term maintenance costs to SCDOT.	Increased cost of $5,000	Joint details will be included in the RFC bridge plans.
5	All cast-in-place concrete substructure components will be constructed with a 5000 psi concrete mix versus the required 4000 psi	Provides superior strength and long-term performance and reduces future maintenance costs	Increased cost of $5,000	5000 psi concrete will be required by the RFC bridge plans.
6	Lowering the existing bridge low chord at sites S-138 over Goucher Creek, S-226 over Unnamed Stream, and S-86 over Kings Creek	Lowers fill height and negates the need for steep slopes and/or use of “sliver fill” for road widening on roadway approaches	Estimated savings of $40,000	All changes to the bridge low chord will comply with the RFP criteria.
7	FATC 2 - S-226 over Unnamed Stream	Significant reduction in stream impacts and required ROW	$200,000 cost reduction associated with reduction in stream mitigation credits required 20 days saved by not relocating stream	This FATC allows our Team to submit the most cost-effective design. Our price proposal will include the savings associated with this FATC, so we consider this a contractual requirement that is part of the Agreement.
8	FATC 2 - S-106 over Branch of Suck Creek	Significant reduction in stream impacts and required ROW	$45,000 cost reduction associated with reduction in stream mitigation credits required 15 days saved by not relocating stream	This FATC allows our Team to submit the most cost-effective design. Our price proposal will include the savings associated with this FATC, so we consider this contractual requirement that is part of the Agreement.

Cost/Schedule Impacts – Describe the Cost in dollars and/or Schedule impacts in days associated with the feature (positive or negative).
Self-imposed Assurance – Discuss any penalties or liquidated damages that will apply in the event the CONTRACTOR cannot implement the feature as described.

APPROVED FORMAL ATCS

APPENDIX C

SCDOT
South Carolina

Formal ATCs Resubmittal

Date Received: **9/29/2022**

Lane			SCDOT		
ATC No.	Primary Discipline	Concept	Response	Justification	Final?
1	Hydrology	S-86 two span with no skew	Approved		Yes
2	Geotechnical	Alternative detail to protect roadway fill slopes	Approved		Yes
3	Pavement	Additional pavement options for bridge approaches - CMRB	Approved		Yes

Post Office Box 191
Columbia, South Carolina 29202-0191

Phone: (803) 737-2314
TTY: (803) 737-3870

AN EQUAL OPPORTUNITY
AFFIRMATIVE ACTION EMPLOYER

Formal Alternative Technical Concepts Submittal Form

Project: Bridge Package 14 **Project ID:** 1162220

ATC No.: 1 **Priority:** High **Team:** The Lane Team **Date:** 9/23/22

Description (required):

This ATC proposes a two span layout for the S-86 bridge over Kings Creek where none of the bridge foundations are skewed.

Usage:

This ATC applies only to the S-86 bridge over Kings Creek.

Deviations (required):

Exhibit 4b section 2.1.6 - Provide the minimum channel span length, minimum bridge length, and minimum bent skew angle (measured from a line perpendicular to the alignment centerline) at each site as listed in Attachment B - Hydrology. At S-86 over Kings Creek, the minimum skew is 15 degrees.

Justification:

The conceptual bridge layout provided in the RFP is three spans (30'-100'-30'). Bent 2 is skewed to be parallel with the stream. The existing bridge also has a interior bent at this location (bent 2) that is not skewed and is experiencing significant erosion in front of the pilings (see Attachment 1). By using a two span bridge (115'-45'), we eliminate the need for a bent on this side of the stream which will mitigate any future issues if the channel continues to move in this direction. By not skewing the end bents, we maintain the current bridge opening. By hydraulic modeling we have confirmed the proposed bridge will not result in backwater greater than 1-foot compared to natural conditions. All other hydraulic criteria in Exhibit 4e will be achieved.

Schedule:

Approval of this ATC will eliminate one interior bent therefore accelerating bridge construction by 2.5 weeks.

Impacts:

There are no additional impacts associated with this ATC.

History:

The existing bridge was constructed as a five-span, 150-foot bridge in 1957 (30-foot precast double tee beam spans). Based on a review of construction plans for the existing bridge, interior bent 2 (Sta. 49+38) was originally located approximately 60 feet from the nearest bank along Kings Creek in 1957. Today, the channel has migrated significantly toward the western abutment, and high flows have eroded the overbank and caused the channel to shift to within approximately 5 feet of bent 2. The channel migration has likely been exacerbated by debris collection on the interior bents and deflection of flow toward the west abutment. The damage to the existing bridge in the vicinity of bent 2 is reflected in the most recent NBIS codes for the substructure (Item 60; Code 5; minor damage to bridge elements), channel protection (Item 61; Code 5; major damage and erosion of channel) and scour condition (Item 113; Code 3; scour critical; bridge foundations unstable).

Risks:

This ATC reduces the potential for debris accumulation and eliminates an interior bent on the outside bank of a meander bend that is currently experiencing erosion and damage along the channel bank. The potential for abutment scour is

Post Office Box 191
Columbia, South Carolina 29202-0191
Phone: (803) 737-2314
TTY: (803) 737-3870

AN EQUAL OPPORTUNITY
AFFIRMATIVE ACTION EMPLOYER

Formal Alternative Technical Concepts Submittal Form

Project: Bridge Package 14 **Project ID:** 1162220

ATC No.: 1 **Priority:** High **Team:** The Lane Team **Date:** 9/23/22

reduced since we are not placing fill inside the current bridge opening area, and the potential for local pier scour on the overbank is eliminated. Since the interior bent that is proposed to be eliminated is in a high flow conveyance zone with an increased potential for debris drift, removing the potential for debris accumulation on the substructure also eliminates the possibility of local damage to the overbank and abutment due to debris blockage. This reduces the risk of major repair work or even bridge replacement.

Costs (required):

The elimination of an interior bent will save approximately $250,000.

Quality:

By eliminating the minimum skew angle requirement and removing an interior bent, we are providing a larger opening which reduces risk and future maintenance. Our proposed foundations have been arranged so that they do not conflict with the timber pilings of the current bridge.

Operations & Maintenance:

Our proposed bridge layout greatly reduces the potential for scour and debris build up, thus saving on maintenance and future repair costs. The conceptual bridge layout would likely result in new fill being placed in the overbank area on the upstream side of the western abutment as a result of the proposed skew. There is a large amount of flood discharge flowing into the bridge opening from the western floodplain (approximate 400 foot floodplain width on that side just upstream of Road S-86), and any new fill placed in this flow transition zone would be subject to higher velocities and scour. By removing the skew, this ATC would provide abutments that are aligned more parallel to the flow transition lines, and little or no new fill would be required along the western abutment. Compared to the conceptual bridge plan, the ATC would result in reduced flow transition velocities, a lower potential for abutment scour, and less probability of abutment maintenance and repairs in the future.

Post Office Box 191
Columbia, South Carolina 29202-0191
Phone: (803) 737-2314
TTY: (803) 737-3870

AN EQUAL OPPORTUNITY
AFFIRMATIVE ACTION EMPLOYER

Attachment 1 - FATC #01

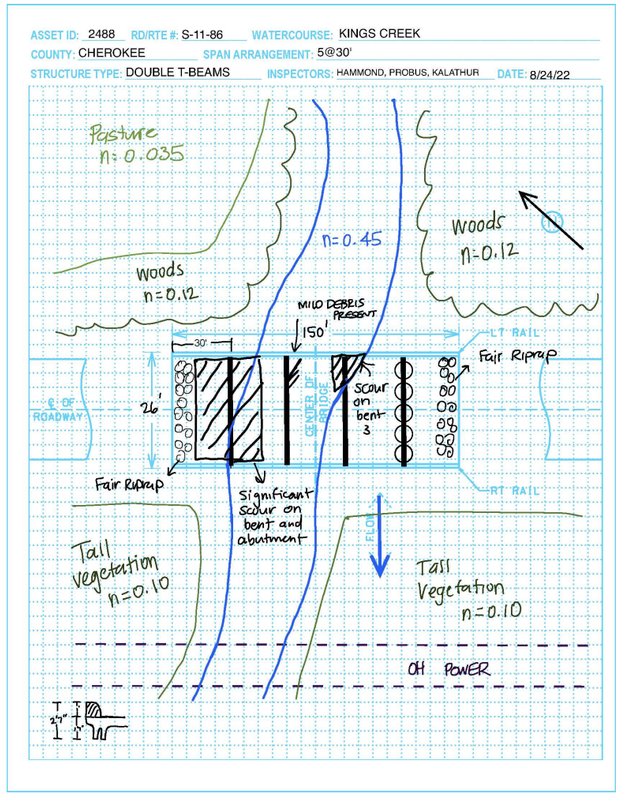

Bent 3

Bent 2 (ATC design avoids a Bent at this location)

PLAN AND PROFILE

BRIDGE PLANS ID	SHEET NO.
P041152-B01	1

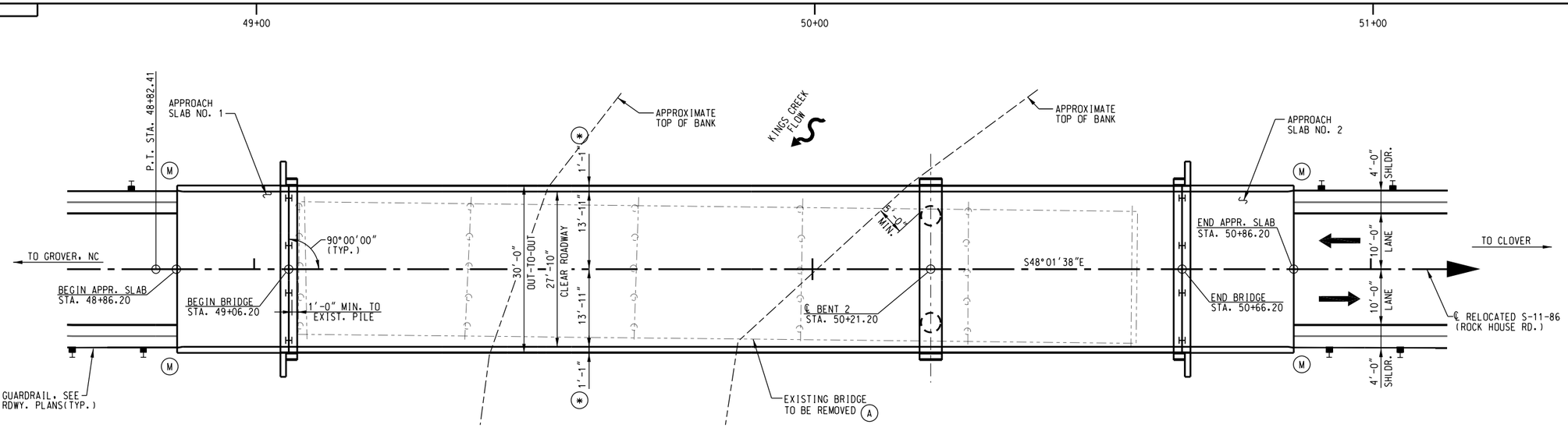

PLAN

(A) REMOVE AND DISPOSE OF EXISTING 150'-0" x 25'-6" 5-SPAN PRESTRESSED CHANNEL BRIDGE AND APPURTENANCES IN ACCORDANCE WITH SECTION 202.4.2 OF THE STANDARD SPECIFICATIONS.

(*) INCLUDES 1'-0" MASH BARRIER AND 1" SLAB EXTENSION.

(M) DENOTES MTBBC3 GUARDRAIL ATTACHMENT

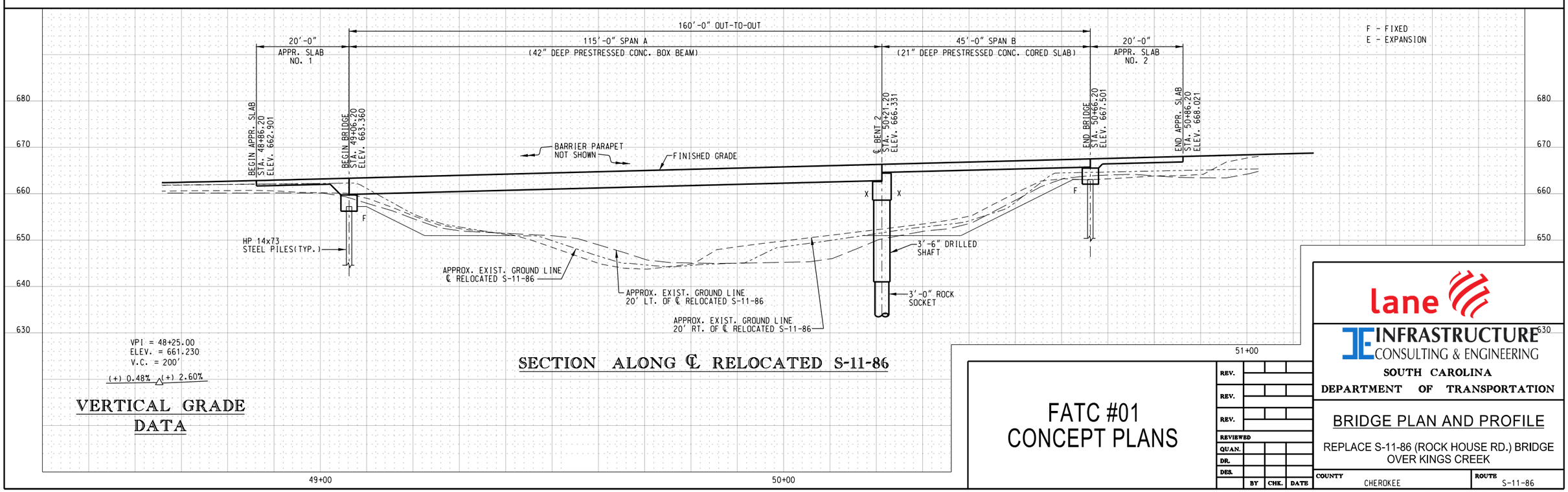

SECTION ALONG ℄ RELOCATED S-11-86

VERTICAL GRADE DATA

FATC #01
CONCEPT PLANS

REV.			
REV.			
REV.			
REVIEWED			
QUAN.			
DR.			
DES.			
	BY	CHK.	DATE

lane
INFRASTRUCTURE CONSULTING & ENGINEERING

SOUTH CAROLINA DEPARTMENT OF TRANSPORTATION

BRIDGE PLAN AND PROFILE

REPLACE S-11-86 (ROCK HOUSE RD.) BRIDGE OVER KINGS CREEK

COUNTY: CHEROKEE

ROUTE: S-11-86

DRAWING NO. 700-06

Z:\Projects\22-61Bridge Package 14\S-86 over Kings Creek\Structures\Tech Proposal Plans\S-86_Kings Cr_PLAN_PROFILE.dgn
9/16/2022

Formal Alternative Technical Concepts Submittal Form

Project: Bridge Package 14 **Project ID:** 1162220

ATC No.: 2 **Priority:** High **Team:** The Lane Team **Date:** 9/23/22

Description (required):

This ATC proposes an alternate detail to protect roadway fill slopes adjacent to ditches/streams by armoring the slope with rip rap and geotextile fabric.

Usage:

This ATC applies to S-226 over Unnamed Stream and S-106 over Branch of Suck Creek.

Deviations (required):

RFP Attachment B contains the "Detail Of Ditch At Toe Of Fill". This detail shows a 5' wide berm sloped at 20:1 between a 2:1 fill slope and a 2:1 slope for a V-ditch.

Justification:

Bridge embankment fill slopes are commonly protected with rip rap (see SCDOT standard drawing 804-105-00). To further protect the slope we will take the rip rap up to the 100 year flood elevation. In cases where the embankment requires reinforcement (steeper than 2:1), rip rap will be installed on the entire face of slope.

Schedule:

Approval of this ATC will enable these sites to go to construction faster since impacts to WOUS are less.

Impacts:

This ATC will reduce stream impacts and if we are able to show no functional loss may eliminate the need to purchase mitigation credits. There will also be a reduction in the amount of new right of way required.

History:

SCDOT standard drawing 804-105-00 (Riprap - Bridge End) is used to protect bridge abutments from floods and scour all across the state.

Risks:

SCDOT standard drawing 804-105-00 will be followed to mitigate any risks to the Department. Rip rap will be buried 2' below the original ground line.

Costs (required):

We estimate savings in mitigation cost savings, roadway work and right of way to be $500,000.

Quality:

This ATC will not have any negative effects on quality.

Operations & Maintenance:

Operations & Maintenance will be unaffected.

Post Office Box 191
Columbia, South Carolina 29202-0191

Phone: (803) 737-2314
TTY: (803) 737-3870

AN EQUAL OPPORTUNITY
AFFIRMATIVE ACTION EMPLOYER

Formal Alternative Technical Concepts Submittal Form

Project: Bridge Package 14 **Project ID:** 1162220

ATC No.: 2 **Priority:** High **Team:** The Lane Team **Date:** 9/23/22

Post Office Box 191
Columbia, South Carolina 29202-0191

Phone: (803) 737-2314
TTY: (803) 737-3870

AN EQUAL OPPORTUNITY
AFFIRMATIVE ACTION EMPLOYER

Attachment 1 - FATC #02

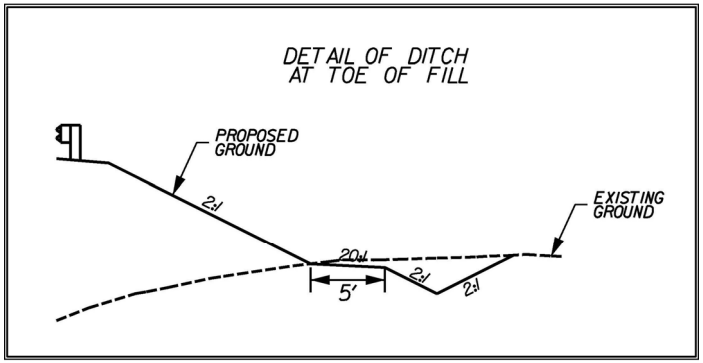

RFP Detail

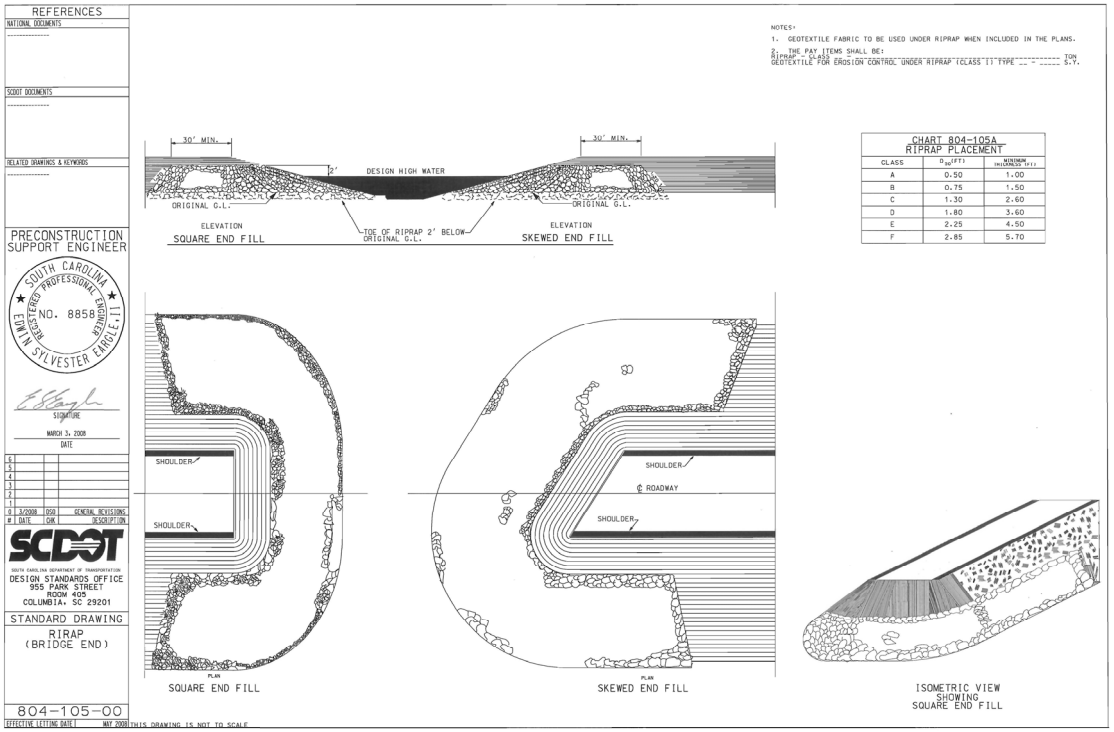

Attachment 2 - FATC #02

S–226 OVER UNNAMED STREAM

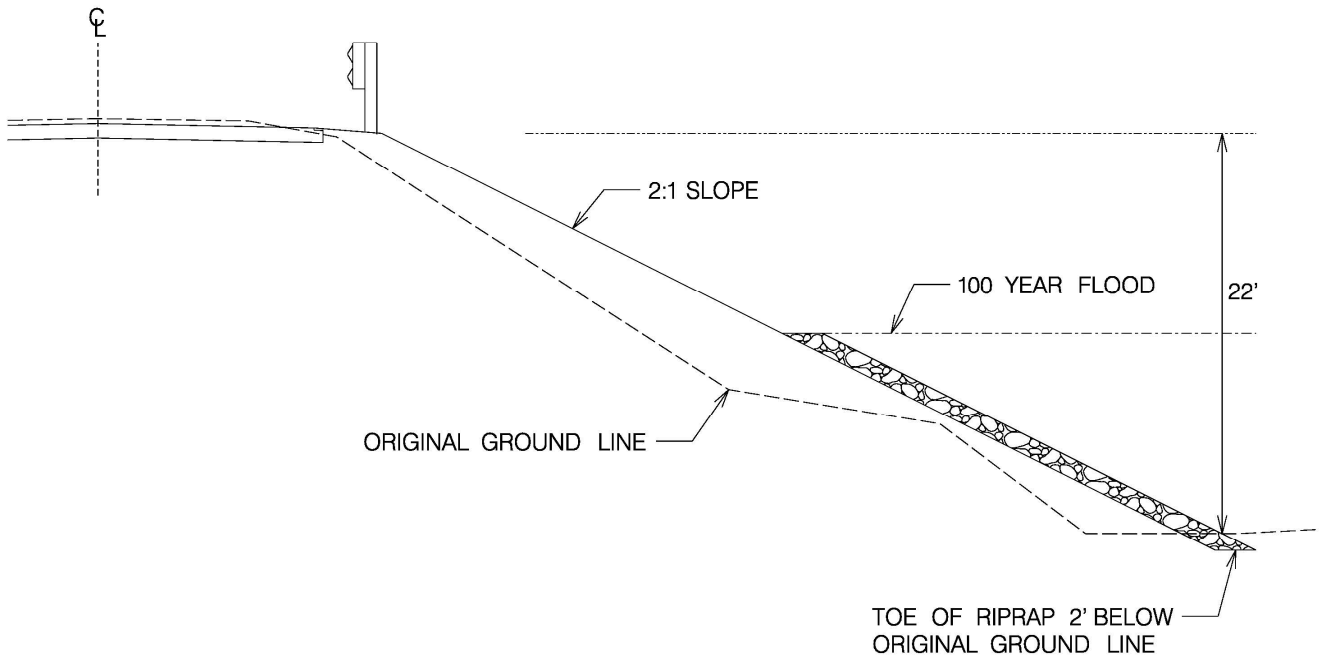

Attachment 3 - FATC #02

S–106 OVER BRANCH OF SUCK CREEK

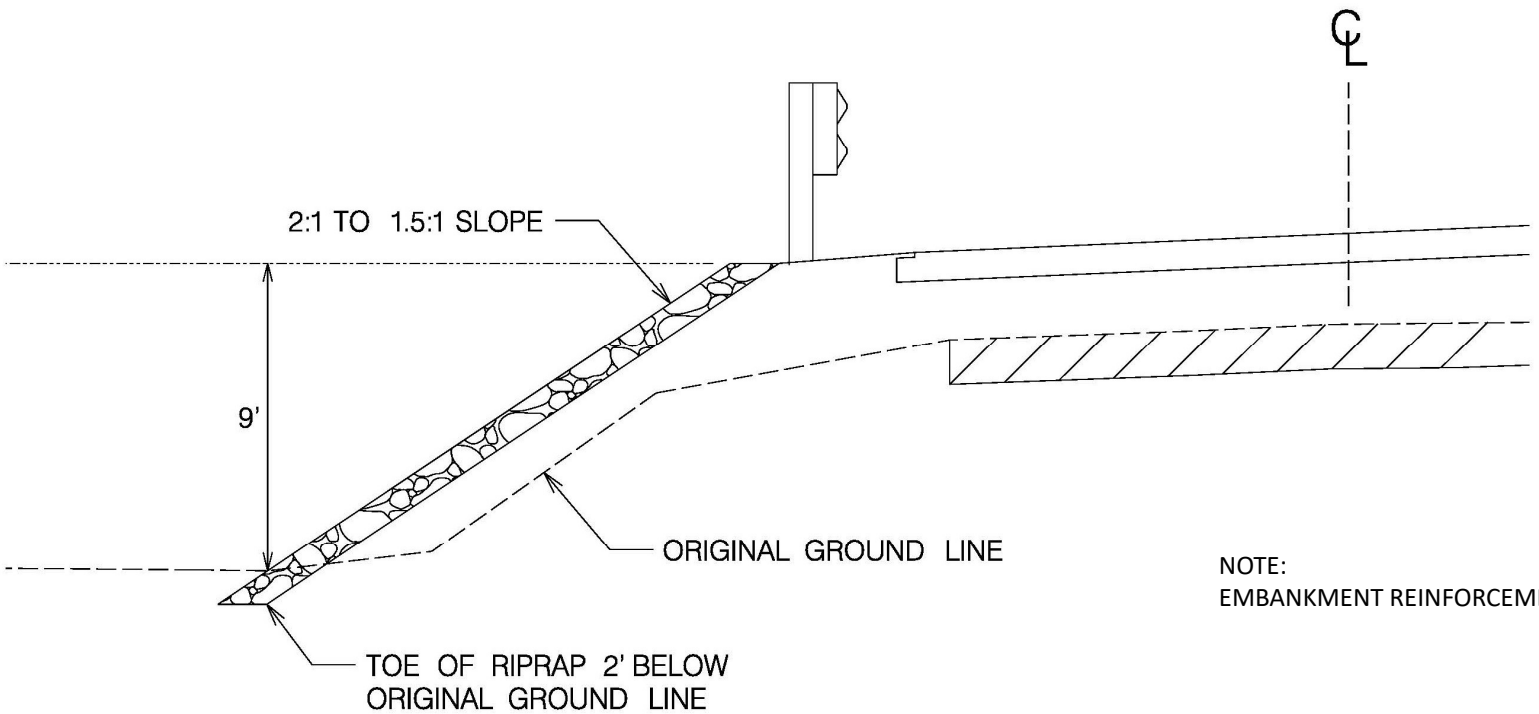

NOTE:
EMBANKMENT REINFORCEMENT IS NOT SHOWN.

Formal Alternative Technical Concepts Submittal Form

Project: Bridge Package 14 **Project ID:** 1162220

ATC No.: 3 **Priority:** Med **Team:** The Lane Team **Date:** 9/23/22

Description (required):

The Lane Team proposes the use of additional pavement options for the construction of roadway approaches for Bridge Package 14 by incorporating Cement Modified Recycled Base (CMRB) in order to provide a more efficient pavement section.

Usage:

New option with CMRB layer would be used as prescribed within new pavement groups 1, 2, and 3. Pavement Option 3 is summarized in Attachment 1. The structural number (SN) calculations for the RFP and FATC options are shown in Attachments 2 through 7. The latest edition of the SCDOT CMRB Supplemental Technical Specification (SC-M-306) will be used. Curing method A will only be allowed if there is no damage prior to paving. If single treatment is damaged then method b with additional chip seal application is required.

Deviations (required):

Exhibit 4c Section 2.1 lists two options for the pavement design of each road. This FATC requests approval for a new option (Option 3) as summarized in Attachment 1 using either a 6-inch thick, 10-inch thick or a 12-inch thick layer of CMRB with 175 psy HMA Surface Type C or Type D. A paving fabric will be used between the CMRB and asphalt surface course to reduce the potential for reflection cracking.

Justification:

CMRB takes advantage of demolished material on site, and by adding cement and using on-site and off-site earth and aggregate in the reclamation process, results in a very efficient and reliable base for the pavement.

Schedule:

No schedule changes are anticipated.

Impacts:

There would be no adverse impact from the approval of this FATC.

History:

SCDOT has been using Cement-Modified CMRB as a base material for pavement since 1994, incorporating the recycling of existing aged asphalt material. SCDOT has recycled 4 million square yards of asphalt since 2016 and 8 million square yards since 2006.

Risks:

There are no increased risks.

Costs (required):

The net estimated savings is approximately $100,000.

Post Office Box 191
Columbia, South Carolina 29202-0191

Phone: (803) 737-2314
TTY: (803) 737-3870

AN EQUAL OPPORTUNITY
AFFIRMATIVE ACTION EMPLOYER

Formal Alternative Technical Concepts Submittal Form

Project: Bridge Package 14 **Project ID:** 1162220

ATC No.: 3 **Priority:** Med **Team:** The Lane Team **Date:** 9/23/22

Quality:

This ATC will increase the quality of the final product by eliminating the need to perform full depth patching of the roadway approaches since the CMRB operation will reconstruct the entire roadway section.

Operations & Maintenance:

Operations and Maintenance will be unaffected.

Post Office Box 191
Columbia, South Carolina 29202-0191

Phone: (803) 737-2314
TTY: (803) 737-3870

AN EQUAL OPPORTUNITY
AFFIRMATIVE ACTION EMPLOYER

Attachment 1 - FATC #03

2. CRITERIA

2.1 New Pavement

For new pavement and replacement of mainline, use the following structure:

	Route	Option 1	Option 2
Group 1	Cherokee S-56	175 psy HMA Surface Type C or Type D 450 psy HMA Base Type A or Type B	175 psy HMA Surface Type C or Type D 8 inches GABC
Group 2	Cherokee S-86 Cherokee S-106 Cherokee S-226	150 psy HMA Surface Type C or Type D 175 psy HMA Surface Type C [1)] 600 psy HMA Base Type A or Type B	150 psy HMA Surface Type C or Type D 175 psy HMA Surface Type C [1)] 10 inches GABC
Group 3	Cherokee S-138	175 psy HMA Surface Type C or D 175 psy HMA Surface Type C [1)] 600 psy HMA Base Type A or B	175 psy HMA Surface Type C or D 300 psy HMA Intermediate Type C 10 inches GABC

[1)] 200 psy HMA Intermediate Type B or C can be substituted

RFP Pavement Options

	Route	Option 3
Group 1	Cherokee S-56	175 psy HMA Surface Type C or Type D Non Woven Paving Fabric 6 inches CMRB
Group 2	Cherokee S-86 Cherokee S-106 Cherokee S-226	175 psy HMA Surface Type C or Type D Non Woven Paving Fabric 10 inches CMRB
Group 3	Cherokee S-138	175 psy HMA Surface Type C or Type D Non Woven Paving Fabric 12 inches CMRB

Proposed Option 3

Attachment 2 - FATC #03

RFP Pavement Options

Flexible Pavement Design

INFRASTRUCTURE CONSULTING & ENGINEERING

Road:	SCDOT Bridge Package 14	Date:	9/16/2022
County:	Cherokee	Analysis by:	Elham Farzam
Description:	Group 1 Pavement (option 1)	Checked by:	Andy Gillis

Conversion of Pavement Design to Thickness

1. Surface and Binder Courses

Material	Rate (psy)	Yield	Thick. (in)	New a1	Dep A1	SN Year (0-10)
AC Surface	175	105	1.67	0.44	0.26	0.73
AC Intermediate		105	0.00	0.44	0.26	0.00
Over 400 PSY Thickness		105	0.00	0.34	0.34	0.00
SUBTOTAL						**0.73**

2. Base Courses

Material	Rate (psy)	Yield	Thick. (in)	New a2	Dep A2	SN Year (0-10)
Asphalt Aggregate Base		450	4.29	0.34	0.34	1.46
Graded Aggregate Base				0.18	0.18	0.00
Cement-Modified Recycled Base				0.26	0.26	0.00
Cement Stabilized Earth Base				0.25	0.25	0.00
Cement Stabilized Agg. Base				0.34	0.34	0.00
SUBTOTAL						**1.46**

3. Subbase Courses

Material	Rate (psy)	Yield	Thick. (in)	New a3	Dep A3	SN Year (0-10)
Earth Subbase				0.08	0.08	0.00
Soil Agg. Subbase				0.10	0.10	0.00
Cement-Modified Subbase				0.15	0.15	0.00
SUBTOTAL						**0.00**
				Total SN Provided		**2.19**

Flexible Pavement Design

INFRASTRUCTURE CONSULTING & ENGINEERING

Road:	SCDOT Bridge Package 14	Date:	9/16/2022
County:	Cherokee	Analysis by:	Elham Farzam
Description:	Group 1 Pavement (option 2)	Checked by:	Andy Gillis

Conversion of Pavement Design to Thickness

1. Surface and Binder Courses

Material	Rate (psy)	Yield	Thick. (in)	New a1	Dep A1	SN Year (0-10)
AC Surface	175	105	1.67	0.44	0.26	0.73
AC Intermediate		105	0.00	0.44	0.26	0.00
Over 400 PSY Thickness		105	0.00	0.34	0.34	0.00
SUBTOTAL						**0.73**

2. Base Courses

Material	Rate (psy)	Yield	Thick. (in)	New a2	Dep A2	SN Year (0-10)
Asphalt Aggregate Base			0.00	0.34	0.34	0.00
Graded Aggregate Base			8	0.18	0.18	1.44
Cement-Modified Recycled Base				0.26	0.26	0.00
Cement Stabilized Earth Base				0.25	0.25	0.00
Cement Stabilized Agg. Base				0.34	0.34	0.00
SUBTOTAL						**1.44**

3. Subbase Courses

Material	Rate (psy)	Yield	Thick. (in)	New a3	Dep A3	SN Year (0-10)
Earth Subbase				0.08	0.08	0.00
Soil Agg. Subbase				0.10	0.10	0.00
Cement-Modified Subbase				0.15	0.15	0.00
SUBTOTAL						**0.00**
				Total SN Provided		**2.17**

Attachment 3 - FATC #03

Proposed Option 3

Flexible Pavement Design

INFRASTRUCTURE CONSULTING & ENGINEERING

Road:	SCDOT Bridge Package 14	Date:	9/16/2022
County:	Cherokee	Analysis by:	Elham Farzam
Description:	Group 1 Pavement (CMRB ATC)	Checked by:	Andy Gillis

Conversion of Pavement Design to Thickness

1. Surface and Binder Courses

Material	Rate (psy)	Yield	Thick. (in)	New a1	Dep A1	SN Year (0-10)
AC Surface	175	105	1.67	0.44	0.26	0.73
AC Intermediate		105	0.00	0.44	0.26	0.00
Over 400 PSY Thickness		105	0.00	0.34	0.34	0.00
SUBTOTAL						**0.73**

2. Base Courses

Material	Rate (psy)	Yield	Thick. (in)	New a2	Dep A2	SN Year (0-10)
Asphalt Aggregate Base			0.00	0.34	0.34	0.00
Graded Aggregate Base			0	0.18	0.18	0.00
Cement-Modified Recycled Base			6	0.26	0.26	1.56
Cement Stabilized Earth Base				0.25	0.25	0.00
Cement Stabilized Agg. Base				0.34	0.34	0.00
SUBTOTAL						**1.56**

3. Subbase Courses

Material	Rate (psy)	Yield	Thick. (in)	New a3	Dep A3	SN Year (0-10)
Earth Subbase				0.08	0.08	0.00
Soil Agg. Subbase				0.10	0.10	0.00
Cement-Modified Subbase				0.15	0.15	0.00
SUBTOTAL						**0.00**
				Total SN Provided		**2.29**

This Option provides a SN > 2.19 (Group 1 - Option 1)

Attachment 4 - FATC #03

RFP Pavement Options

Flexible Pavement Design

INFRASTRUCTURE CONSULTING & ENGINEERING

Road:	SCDOT Bridge Package 14	Date:	9/16/2022
County:	Cherokee	Analysis by:	Elham Farzam
Description:	Group 2 Pavement (option 1)	Checked by:	Andy Gillis

Conversion of Pavement Design to Thickness

1. Surface and Binder Courses

Material	Rate (psy)	Yield	Thick. (in)	New a1	Dep A1	SN Year (0-10)
AC Surface	150	105	1.43	0.44	0.26	0.63
AC Intermediate	175	105	1.67	0.44	0.26	0.73
Over 400 PSY Thickness		105	0.00	0.34	0.34	0.00
SUBTOTAL						**1.36**

2. Base Courses

Material	Rate (psy)	Yield	Thick. (in)	New a2	Dep A2	SN Year (0-10)
Asphalt Aggregate Base		600	5.71	0.34	0.34	1.94
Graded Aggregate Base				0.18	0.18	0.00
Cement-Modified Recycled Base				0.26	0.26	0.00
Cement Stabilized Earth Base				0.25	0.25	0.00
Cement Stabilized Agg. Base				0.34	0.34	0.00
SUBTOTAL						**1.94**

3. Subbase Courses

Material	Rate (psy)	Yield	Thick. (in)	New a3	Dep A3	SN Year (0-10)
Earth Subbase				0.08	0.08	0.00
Soil Agg. Subbase				0.10	0.10	0.00
Cement-Modified Subbase				0.15	0.15	0.00
SUBTOTAL						**0.00**
				Total SN Provided		**3.30**

Flexible Pavement Design

INFRASTRUCTURE CONSULTING & ENGINEERING

Road:	SCDOT Bridge Package 14	Date:	9/16/2022
County:	Cherokee	Analysis by:	Elham Farzam
Description:	Group 2 Pavement (Option 2)	Checked by:	Andy Gillis

Conversion of Pavement Design to Thickness

1. Surface and Binder Courses

Material	Rate (psy)	Yield	Thick. (in)	New a1	Dep A1	SN Year (0-10)
AC Surface	150	105	1.43	0.44	0.26	0.63
AC Intermediate	175	105	1.67	0.44	0.26	0.73
Over 400 PSY Thickness		105	0.00	0.34	0.34	0.00
SUBTOTAL						**1.36**

2. Base Courses

Material	Rate (psy)	Yield	Thick. (in)	New a2	Dep A2	SN Year (0-10)
Asphalt Aggregate Base			0.00	0.34	0.34	0.00
Graded Aggregate Base			10	0.18	0.18	1.80
Cement-Modified Recycled Base				0.26	0.26	0.00
Cement Stabilized Earth Base				0.25	0.25	0.00
Cement Stabilized Agg. Base				0.34	0.34	0.00
SUBTOTAL						**1.80**

3. Subbase Courses

Material	Rate (psy)	Yield	Thick. (in)	New a3	Dep A3	SN Year (0-10)
Earth Subbase				0.08	0.08	0.00
Soil Agg. Subbase				0.10	0.10	0.00
Cement-Modified Subbase				0.15	0.15	0.00
SUBTOTAL						**0.00**
				Total SN Provided		**3.16**

Attachment 5 - FATC #03

Proposed Option 3

Flexible Pavement Design

INFRASTRUCTURE CONSULTING & ENGINEERING

Road:	SCDOT Bridge Package 14	Date:	9/16/2022
County:	Cherokee	Analysis by:	Elham Farzam
Description:	Group 2 Pavement (CMRB ATC)	Checked by:	Andy Gillis

Conversion of Pavement Design to Thickness

1. Surface and Binder Courses

Material	Rate (psy)	Yield	Thick. (in)	New a1	Dep A1	SN Year (0-10)
AC Surface	175	105	1.67	0.44	0.26	0.73
AC Intermediate		105	0.00	0.44	0.26	0.00
Over 400 PSY Thickness		105	0.00	0.34	0.34	0.00
SUBTOTAL						**0.73**

2. Base Courses

Material	Rate (psy)	Yield	Thick. (in)	New a2	Dep A2	SN Year (0-10)
Asphalt Aggregate Base			0.00	0.34	0.34	0.00
Graded Aggregate Base				0.18	0.18	0.00
Cement-Modified Recycled Base			10	0.26	0.26	2.60
Cement Stabilized Earth Base				0.25	0.25	0.00
Cement Stabilized Agg. Base				0.34	0.34	0.00
SUBTOTAL						**2.60**

3. Subbase Courses

Material	Rate (psy)	Yield	Thick. (in)	New a3	Dep A3	SN Year (0-10)
Earth Subbase				0.08	0.08	0.00
Soil Agg. Subbase				0.10	0.10	0.00
Cement-Modified Subbase				0.15	0.15	0.00
SUBTOTAL						**0.00**
				Total SN Provided		**3.33**

This Option provides a SN > 3.30 (Group 2 - Option 1)

Attachment 6 - FATC #03

RFP Pavement Options

Flexible Pavement Design

INFRASTRUCTURE CONSULTING & ENGINEERING

Road:	SCDOT Bridge Package 14	Date:	9/16/2022
County:	Cherokee	Analysis by:	Elham Farzam
Description:	Group 3 Pavement (option 1)	Checked by:	Andy Gillis

Conversion of Pavement Design to Thickness

1. Surface and Binder Courses

Material	Rate (psy)	Yield	Thick. (in)	New a1	Dep A1	SN Year (0-10)
AC Surface	175	105	1.67	0.44	0.26	0.73
AC Intermediate	175	105	1.67	0.44	0.26	0.73
Over 400 PSY Thickness		105	0.00	0.34	0.34	0.00
SUBTOTAL						**1.47**

2. Base Courses

Material	Rate (psy)	Yield	Thick. (in)	New a2	Dep A2	SN Year (0-10)
Asphalt Aggregate Base		600	5.71	0.34	0.34	1.94
Graded Aggregate Base				0.18	0.18	0.00
Cement-Modified Recycled Base				0.26	0.26	0.00
Cement Stabilized Earth Base				0.25	0.25	0.00
Cement Stabilized Agg. Base				0.34	0.34	0.00
SUBTOTAL						**1.94**

3. Subbase Courses

Material	Rate (psy)	Yield	Thick. (in)	New a3	Dep A3	SN Year (0-10)
Earth Subbase				0.08	0.08	0.00
Soil Agg. Subbase				0.10	0.10	0.00
Cement-Modified Subbase				0.15	0.15	0.00
SUBTOTAL						**0.00**
				Total SN Provided		**3.41**

Flexible Pavement Design

INFRASTRUCTURE CONSULTING & ENGINEERING

Road:	SCDOT Bridge Package 14	Date:	9/16/2022
County:	Cherokee	Analysis by:	Elham Farzam
Description:	Group 3 Pavement (Option 2)	Checked by:	Andy Gillis

Conversion of Pavement Design to Thickness

1. Surface and Binder Courses

Material	Rate (psy)	Yield	Thick. (in)	New a1	Dep A1	SN Year (0-10)
AC Surface	175	105	1.67	0.44	0.26	0.73
AC Intermediate	225	105	2.14	0.44	0.26	0.94
Over 400 PSY Thickness	75	105	0.71	0.34	0.34	0.24
SUBTOTAL						**1.92**

2. Base Courses

Material	Rate (psy)	Yield	Thick. (in)	New a2	Dep A2	SN Year (0-10)
Asphalt Aggregate Base			0.00	0.34	0.34	0.00
Graded Aggregate Base			10	0.18	0.18	1.80
Cement-Modified Recycled Base				0.26	0.26	0.00
Cement Stabilized Earth Base				0.25	0.25	0.00
Cement Stabilized Agg. Base				0.34	0.34	0.00
SUBTOTAL						**1.80**

3. Subbase Courses

Material	Rate (psy)	Yield	Thick. (in)	New a3	Dep A3	SN Year (0-10)
Earth Subbase				0.08	0.08	0.00
Soil Agg. Subbase				0.10	0.10	0.00
Cement-Modified Subbase				0.15	0.15	0.00
SUBTOTAL						**0.00**
				Total SN Provided		**3.72**

Attachment 7 - FATC #03

Proposed Option 3

Flexible Pavement Design

INFRASTRUCTURE CONSULTING & ENGINEERING

Road:	SCDOT Bridge Package 14	Date:	9/16/2022
County:	Cherokee	Analysis by:	Elham Farzam
Description:	Group 3 Pavement (CMRB ATC)	Checked by:	Andy Gillis

Conversion of Pavement Design to Thickness

1. Surface and Binder Courses

Material	Rate (psy)	Yield	Thick. (in)	New a1	Dep A1	SN Year (0-10)
AC Surface	175	105	1.67	0.44	0.26	0.73
AC Intermediate		105	0.00	0.44	0.26	0.00
Over 400 PSY Thickness		105	0.00	0.34	0.34	0.00
SUBTOTAL						**0.73**

2. Base Courses

Material	Rate (psy)	Yield	Thick. (in)	New a2	Dep A2	SN Year (0-10)
Asphalt Aggregate Base			0.00	0.34	0.34	0.00
Graded Aggregate Base				0.18	0.18	0.00
Cement-Modified Recycled Base			12	0.26	0.26	3.12
Cement Stabilized Earth Base				0.25	0.25	0.00
Cement Stabilized Agg. Base				0.34	0.34	0.00
SUBTOTAL						**3.12**

3. Subbase Courses

Material	Rate (psy)	Yield	Thick. (in)	New a3	Dep A3	SN Year (0-10)
Earth Subbase				0.08	0.08	0.00
Soil Agg. Subbase				0.10	0.10	0.00
Cement-Modified Subbase				0.15	0.15	0.00
SUBTOTAL						**0.00**
				Total SN Provided		**3.85**

This Option provides a SN > 3.72 (Group 3 - Option 2)