South Carolina Department of Transportation

(SCDOT) - Bridge Package 2022-14

Design-Build Project; Contract ID 1162220

CHEROKEE COUNTY

October 24, 2022

TECHNICAL PROPOSAL

S-11-56 over Horse Creek

S-11-138 over Goucher Creek

S-11-226 over Unnamed Stream

S-11-106 over Suck Creek

S-11-86 over Kings Creek

Submitted by:

Lee Construction Company of the Carolinas, Inc.

and Davis & Floyd, Inc.

PART I: PROJECT DELIVERY & APPROACH

A: Project Delivery

Lee Construction Company of the Carolinas, Inc. (Lee) will serve as the contracting entity for the Closed & Load Restricted Bridge Package 14 Project and is a prequalified prime contractor with the SCDOT. Lee is headquartered in Pineville, North Carolina, which is located within one hour of Cherokee County, and will manage the overall construction and will perform all major bridge construction operations. Davis & Floyd, Inc. (D|F), lead designer, has many offices across the state of South Carolina. The design will be led by D|F's Columbia, South Carolina office, within minutes of SCDOT headquarters. D|F will provide bridge, H&H, MOT, and roadway design as well as ROW, utility and survey services. D|F will be supported in design by ESP Associates for geotechnical engineering and accredited lab testing as needed, and Soil Consultants, Inc. (DBE) will perform drilling services. Three Oaks (DBE) will provide environmental and public involvement services. P&L Erosion Control, Inc. (P&L) (DBE) will perform clearing and grubbing and roadway work. Lee fully expects to exceed the DBE goals that are typical for this type of project. Lee and D|F attended the DBE outreach event held by the SCDOT on October 19, 2022 and obtained over 16 contacts of potential DBE subcontractors and subconsultants for this project. Lee is committed to meeting the DBE goals of 11.6% (including 0.4% professional services).

The construction of S-11-138 over Goucher Creek (S-138) is recognized by Lee as top priority and critical to the schedule. To meet the required schedule set for this project, Lee commits to begin the geotechnical, design, utility, permitting, and ROW processes as soon as Lee is named as the apparent low bidder. Design Review Schedule and project specific design Quality Control Plan will be submitted for review and approval within 30 days of notice of award.

The design effort to date on these bridge sites has enabled the design and constructability review teams to perform conceptual evaluations of construction access and sequence within the ROW limits as well as plan for development of demolition plans and strategies that support a quick submission for approval by the SCDOT.

Approach

In response to the RFP, Lee's team has invested significant effort towards developing the bridge and roadway designs, as well as evaluating the required permitting, utility impacts, and geotechnical analysis

and exploration. These advancements will be critical to delivering the design so that construction can begin within the designated time frames. Our team has evaluated the construction crews, critical risks, and material challenges which have been used to develop the detailed CPM schedule enclosed. D|F will continue the roadway and bridge design and begin geotechnical exploration for S-11-138 as soon as Lee is announced as the apparent low bidder. In addition to design, below are the ROW, Permit, FEMA, and utility impacts that will be addressed for each bridge site.

TABLE 01: ROW COORDINATION, PERMITTING, AND UTILITY ITEMS

BRIDGE NO.	DESCRIPTION	ROW TRACTS	PERMIT TYPE (GP/NOI)	FEMA	IMPACTED UTILITIES
1	S-11-138 over Goucher Creek	2	None	Zone A	W/T
2	S-11-56 over Horse Creek	4	None	N/A	E/W/T
3	S-11-106 over Suck Creek	4	None	N/A	E/W/T
4	S-11-226 over Unnamed Stream	4	None	N/A	T
5	S-11-86 over Kings Creek	None	None	Zone A	E/T
GP - General Permit NOI - Notice of Intent E - Electric W - Water T - Telecom					

As noted above, the solutions presented in this proposal will achieve the goals outlined in the RFP:

1) Prioritize the S-138 over Goucher Creek replacement to be designed and reconstructed first.

2) Avoidance of ROW acquisition at Kings Mountain National Military Park.

Assurances & Ability to Complete the Project within Required Time Frame

With an 87-year history, Lee has a proven track record of completing work on time and under budget. Lee employs over 60 people, some of whom live in this district and are very familiar with the routes on this project. Ron Shaw and Chris Powers have over 60 years of experience performing this type of work. They are prepared and dedicated to ensure that this project runs smoothly and efficiently from start to finish. This will include assigning Lee's top crews, conducting weekly progress meetings, hiring quality subcontractors and vendors, and making monthly accountability for quality and production a top priority. Adjustments will be made proactively addressing progress, subcontractor performance, erosion control compliance, safety, traffic control, and all issues that need attention. SCDOT will be included in the progress meetings. Lee will allocate two complete bridge crews to this contract to expedite the construction while allowing time for design, utility relocations, ROW acquisition, and other third-party coordination. Lee has the resource capacity to successfully complete this

project, including staffing, equipment, financial, and technological. With eight structure crews and a minimum of two completely committed to this project, Lee is prepared to deliver a comprehensive staffing approach, with additional resources to be allocated as necessary, and has longstanding experience in coordination with SCDOT residents and CEI personnel.

Lee has partnered with a DBE Firm, P&L, for the clearing and grubbing, roadway, grading, erosion control, and grassing work on this project. P&L is headquartered in Cherokee County and is *very* familiar with each of these sites. Lee and P&L have decades of experience working together on similar projects. D|F has over 130 employees across six offices in South Carolina. With D|F's strong group of subconsultants, including ESP and Three Oaks Engineering, Lee has ample resources to deliver these bridges. The first bridge to be designed and built will be S-138. Although our team has the capacity to design multiple bridge projects at once, the primary focus for all team members will be S-138. Once the first design submittals are made, the design team will split to focus on the remaining bridges. S-11-56 over Horse Creek (S-56) and S-11-106 over Suck Creek (S-106) will be the next set of design packages, with S-11-226 over unnamed creek (S-226) and S-11-86 over Kings Creek (S-86) to be the final two bridges to be designed and built. The design team will have an independent quality review team that is available to review and approve designs before submittal. This project is D|F's top priority.

Key components of roadway and bridge projects have experienced supply chain challenges over the last two years. This includes pipes, piles, precast units and other key components. Design, shop drawing preparation and fabrication times have been considered in the detailed CPM schedule provided in Appendix A.3.

Our team's ability to successfully deliver this project begins with the commitment of partnership between the proposed key personnel denoted in the Key Personnel chart below: Ron Shaw (project manager), Chris Powers (construction manager) and Eric Dickey (lead design manager). Participating in weekly meetings during the conceptual design and proposal development has further strengthened this commitment and relationship through open communication and ideas towards delivering a quality project. D|F's design team and lead design engineer, have the capacity to design multiple bridges concurrently as is previously demonstrated with eight SCDOT bridge replacement projects (plus four other county bridge projects) that were designed simultaneously over the last couple of years. These projects are either complete or near completion, providing perfect timing for the bridge and roadway design team to continue development of these designs. Geotechnical exploration will be on

the critical path, and ESP and SCI will have the drilling scheduled for bridge S-138 prior to bid to be ready to go when we have approval to begin. We have history together and are ready to work together again to deliver another successful project.

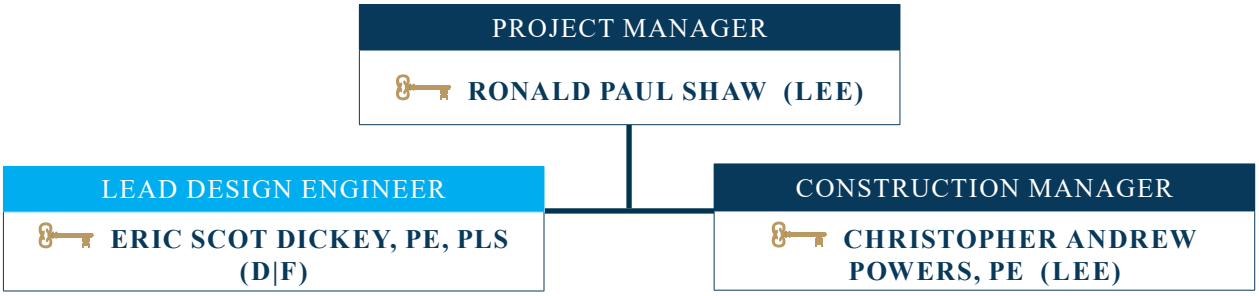

B: Design Approaches to Minimize Need for New ROW

Through the evaluation and design process and visits to each bridge site, the Lee team has focused on providing solutions that minimize or avoid the need for additional ROW. Adjustments to bridge geometry and superelevation changes where the vertical geometry have been limited to hydraulic design criteria and K-values per Preconstruction Design Memorandum 2017-11 (revised 7/1/2019) for Supplemental Design Criteria for Low Volume Bridge Replacement Projects per RFP. The table below denotes approaches to each bridge related to minimizing ROW impacts.

TABLE 02: MINIMIZATION OF ROW IMPACTS

STRATEGY	REDUCTION IN ROW IMPACTS
Guardrail	Guardrail to protect bridge ends has been evaluated for extensions combined with 2:1 slopes to minimize the need for new ROW.
	The use of extended length guardrail post has also been reviewed to reduce minor shoulder impacts that create large impacts to limits of construction and the need for additional new ROW.
Steepened Slopes	The use of steepened slopes on S-226 with reinforced soil slopes reduces ROW footprint.
Bridge Lengths	Minimization of bridge lengths to reduce amount of 75' new ROW required.

The ROW impacts have been evaluated carefully and minimized where possible for each bridge site. Details are provided in the following table.

TABLE 03: ROW ANTICIPATED FOR EACH BRIDGE SITE

BRIDGE	APPROACH TO REDUCING ROW IMPACTS
S-11-138 over Goucher Creek	The ROW impacts are limited to the new 75' ROW required per the RFP left and right and at the beginning/end of the bridge.
S-11-56 over Horse Creek	The ROW impacts are limited to the new 75' ROW required per the RFP left and right and at the beginning/end of the bridge.
S-11-106 over Suck Creek	The ROW impacts are limited to the new 75' ROW required per the RFP left and right and at the beginning/end of the bridge.

TABLE O3: ROW ANTICIPATED FOR EACH BRIDGE SITE, CONTINUED	
BRIDGE	APPROACH TO REDUCING ROW IMPACTS
S-11-226 over Unnamed Stream	ROW impacts are limited to the new 75' ROW required per the RFP left and right at the end of bridge and roadway improvements at the beginning of the bridge. The roadway impacts at the beginning of the bridge are reduced by steeper than 2:1 side slopes.
S-11-86 over Kings Creek	ROW impacts were eliminated by using guardrail with additional length post to reduce the shoulder width.

For each bridge location, existing horizontal geometry has been retained and minor adjustments to D|F's design team has thoroughly reviewed the design parameters and information provided for these bridge sites. Our focus has been to deliver quality designs while maintaining minimum required bridge lengths, horizontal roadway alignment and right sizing embankment slopes have contributed to the reduction in ROW, utility and environmental impacts as well as shortening the overall project length. Driveways impacted by construction activities and alignment adjustments will be properly repaired or adjusted where needed. Our approach is highlighted below.

THE S-138 BRIDGE REPLACEMENT OVER GOUCHER CREEK
The S-138 bridge replacement over Goucher Creek is expected to be a 30'-wide-120-long bridge consisting of a 90' AASTHO BII-36 box beam span and a 30' hollow cored slab span. Turn back wing walls will be provided at each end of the bridge. The interior bent cap will be support by steel HP piles encased in concrete for corrosion protection per approved ATC 2. In order to meet abutment spill through slope protection and toe of slope offset requirements of the RFP, the end bent cap depths are expected to be deeper than typically used, allowing to the top of the berm in front of the caps to be set approximately 4.7' below the bottom of the superstructure. The bridge barrier parapets will be extended to the end of the approach slabs and a guardrail MTBBC3 approach stiffness transition provided.
THE S-56 BRIDGE REPLACEMENT OVER HORSE CREEK
The S-56 bridge replacement over Horse Creek is expected to be a 36'-wide, single span 50'-long hollow cored slab bridge. Additional bridge width is provided to accommodate the 12' lanes, 4' minimum shoulders and horizontal curve of the roadway alignment. The bridge barrier parapets will be extended to the end of the approach slabs and a guardrail MTBBC2 approach stiffness transition provided.
THE S-106 BRIDGE REPLACEMENT OVER SUCK CREEK
The S-106 bridge replacement over Suck Creek is expected to be a 33'-wide, single span 60'-long hollow cored slab bridge. Additional bridge width is provided to accommodate the 10' lanes, 4' minimum shoulders, and horizontal curve of the roadway alignment. Due to the superelevation of the bridge, the top and bottom of the end bent caps will be sloped to match the roadway superelevation. The bridge barrier parapets will terminate at the beginning of the bridge and extended to the end of the approach slab at the end of the bridge with guardrail MTBBC2 approach stiffness transitions provided at each. Straight wing walls will be provided on each end of the bridge to allow the installation of guardrail posts adjacent to the approach slab at the beginning of the bridge. A turn back wing wall will be constructed in this same NW quadrant. The abutment from the previous bridge will also be removed.

THE S-86 BRIDGE REPLACEMENT OVER KINGS CREEK
The S-86 bridge replacement over Kings Creek is expected to be a 30’ wide 160’ long bridge consisting of a 100’ AASTHO BIII-36 box beam center span and 30’ hollow cored slab end spans. Straight wing walls will be provided at each end of the bridge. The interior bent caps will be support by steel HP piles encased in concrete for corrosion protection per approved ATC 2. The bridge barrier parapets will be extended to the end of the approach slabs and a guardrail MTBBC3 approach stiffness transition provided.
THE S-226 BRIDGE REPLACEMENT OVER UNNAMED STREAM
The S-226 bridge replacement over Unnamed Stream is expected to be a 30’-wide, single span 80’-long AASTHO BII-36 box beam bridge. Due to the superelevation of the bridge the top of the end bent caps will be sloped to match the roadway superelevation. The bottom of the cap will remain level for ease of construction causing the cap depth to vary along the length of the cap. In order to meet abutment spill through slope protection and toe of slope offset requirements of the RFP, the end bent cap depths are expected to be deeper than typically used allowing, the top of the berm in front of the caps to be set a maximum of approximately 4.7’ below the bottom of the superstructure on the left side of the bridge. The bridge barrier parapets will terminate at the beginning and end of the bridge and guardrail MTBBC2 approach stiffness transitions provided. Straight wing walls will be provided on three quadrants of the bridge to allow the installation of guardrail posts adjacent to the approach slabs. A turn back wing wall will be constructed in this same NW quadrant.

All end bent caps are expected to be supported by steel HP piles. Our team is prepared for shallow rock as it is expected at several bridge sites so we understand that there are to be piles installed in predrilled holes or rock sockets if determined to be required during final design. The abutment spill through slopes will be protected by riprap at all bridge locations. Deck drain block-outs will be provided in the bottom of the bridge barrier parapets on each side of the bridge or the low side of the bridge for superelevated bridges for additional bridge drainage. Embankment construction at all bridges will generally consist of clearing vegetation, grubbing root systems, and preparing exposed subgrade (i.e., stabilization if necessary) at bottom of slopes and benching existing slopes for receipt of new fill soils. At bridge S-226, a steepened slope will be used in the south side to avoid stream impacts. Construction will require removal of the existing embankment from station from about station 160+50 to 163+00 (less the bridge) to the abutment to an approximate elevation of 550 feet, and a high-strength geotextile will be placed. The embankment will then be constructed to the proposed lines and grade, and the face will be protected with a layer of riprap over a separation fabric. The boring data and our site visits do not indicate that large, soft soil deposits are present at embankment widening locations which would require significant undercutting quantities. Some limited undercutting, replacement, and stabilization may be needed in isolated areas. Ultimately, the new bridge replacement and roadway alignment will be tied-in to the existing pavement with a smooth transition.

C: Design Submittal Process

The design process will follow the project specific Design QC plan to assure consistent, quality plans developed in accordance to SCDOT standards and design manuals. As noted in Table 04 on the following page, the sequence of design submission will be dictated by the order of the bridges to be designed, starting with S-186. The aggressive schedule requirements for demolition as well as start and completion of construction for this bridge will drive all critical path activities related to design, materials, utilities, permitting, and ROW processes to be accomplished by these dates to meet the 150-day notice of demolition to be submitted, 30 days following the notice to begin construction, and 180 days following start of construction to be substantially completed.

Per the RFP, our initial design submittal (Submittal 000) will include the Design Review Schedule and Design QC Plan. Submittal 001 will cover our Public Involvement and Traffic Management/Conceptual Work Zone Traffic Control plans for all bridges. Our proposed design submittal process includes consolidating Preliminary/ROW roadway plans. These consolidated Roadway plans and Preliminary Bridge plans along with supporting H|H and Geotechnical reports will be submitted initially for each bridge. This provides the SCDOT with a comprehensive package for initial review. Responses/revisions to close out ROW plan comments for approval can be done while final Roadway/Bridge plans are prepared. A second comprehensive package would include the final Roadway/Bridge plans with supporting reports, followed by responses/revisions for RFC approval. This 2-step submittal process prior to RFC submittal will be staggered with a minimum of 5 days between each bridge submittal package.

Table 04 below details the proposal schedule anticipated for this project.

Submittal 000 will include the Design Submittal Schedule and the Design QC Plan and will be submitted prior to the first design submittal.

Table 04: Design Submittal Package Schedule

		Design Submittal Number																
Bridge Number and Description		0	1	2	3	4	5	6	7	8	9	10	11	12	13	14	15	16
	Design Review Schedule & QC Plan																	
	Pub. Info. & Traffic Mge-WZTC Plan																	
1	S-11-138 over Goucher Creek			PRB	FRB	RFC												
2	S-11-56 over Horse Creek						PRB		FRB		RFC							
3	S-11-106 over Suck Creek							PRB		FRB		RFC						
4	S-11-226 over Unnamed Stream												PRB		FRB		RFC	
5	S-11-86 over Kings Creek													PRB		FRB		RFC

Legend:
PRB = Right of Way (Roadway) & Preliminary Bridge Submittal Package
FRB = Final Roadway & Bridge Submittal Package
RFC = RFC Roadway & Bridge Submittal Package
With prior approval from SCDOT Preliminary and R/W submittal packages for all bridges may be combined to streamline review and approval. Submittal packages will be separated by at least 5 working days.

CONFIDENTIAL

PART 2: INNOVATION AND ADDED VALUE

A: Innovation and Added Value | Throughout discovery and design development of these five bridge projects, the Lee team focused on innovative and added value items that provide cost and schedule benefits and focused on reducing or eliminating ROW and utility impacts. The Quality Matrix below highlights these innovations.

[redacted]

CONFIDENTIAL

[redacted]

CONFIDENTIAL

[redacted]

Appendix A.1

Roadway Plans

S-11-56 over Horse Creek

CONCEPTUAL PLANS

FED. RD. DIV. NO.	STATE	COUNTY	ROUTE NAME	SHEET NO.	TOTAL SHEETS
3	S.C.	CHEROKEE	S-56	1	3

INDEX OF SHEETS		
SHEET #	DESCRIPTION	SHEET TOTALS
1	Title Sheet	1
3	Typical Sections	1
6	Plan and Profile Sheets	1
	TOTAL SHEETS	3

South Carolina Department of Transportation

Design Reference for these plans is the:

2022

REQUEST FOR PROPOSALS INSTRUCTIONS
BRIDGE PACKAGE 14

APPROXIMATE PROJECT LOCATION: CHEROKEE COUNTY

CONCEPTUAL PLANS FOR

CHEROKEE COUNTY
PROPOSED S-56 (MONTGOMERY DRIVE) BRIDGE REPLACEMENT OVER HORSE CREEK
CONTRACT ID: 1162220

NPDES PERMIT INFORMATION

Disturbed Area = TBD Acre(s)

Permitted Area = TBD

Approximate Location of Roadway is

Begin
Latitude 35°10'37"N
Longitude 81°51'56"W

End
Latitude 35°10'30"N
Longitude 81°51'55"W

Hydraulic and NPDES Design provided by:

Davis & Floyd, Inc.

3 DAYS BEFORE DIGGING IN SOUTH CAROLINA

CALL 811

SOUTH CAROLINA 811 (SC811)
WWW.SC811.COM
ALL UTILITIES MAY NOT BE A MEMBER OF SC811.

240 STONEBRIDGE DRIVE, SUITE 305
COLUMBIA, SC 29210
(803) 256-4121

DAVIS & FLOYD

SINCE 1954

CONSTRUCTION LIMITS S-56
STA. 31+00.00 TO STA. 37+50.00

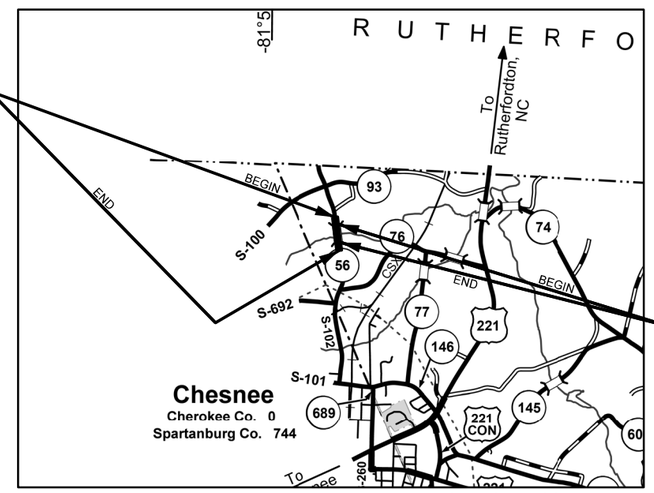

BRIDGE LIMITS FOR S-56
STA. 34+05.00 TO STA. 34+55.00
NOTE: BRIDGE PLANS BOUND UNDER SEPARATE COVER

LAYOUT
SCALE = N.T.S.

CHEROKEE COUNTY

	S-56	TOTAL	
NET LENGTH OF ROADWAY	0.114	0.114	MILES
NET LENGTH OF BRIDGES	0.009	0.009	MILES
NET LENGTH OF PROJECT	0.123	0.123	MILES
LENGTH OF EXCEPTIONS	0.000	0.000	MILES
GROSS LENGTH OF PROJECT	0.123	0.123	MILES

EQUALITIES IN STATIONING
N/A

NOTE: EXCEPT AS MAY OTHERWISE BE SPECIFIED ON THE PLANS OR IN THE SPECIAL PROVISIONS, ALL MATERIALS AND WORKMANSHIP ON THIS PROJECT SHALL CONFORM TO THE SOUTH CAROLINA DEPARTMENT OF TRANSPORTATION STANDARD SPECIFICATIONS FOR HIGHWAY CONSTRUCTION (2007 EDITION) AND THE STANDARD DRAWINGS FOR ROAD CONSTRUCTION IN EFFECT AT THE TIME OF LETTING.

TRAFFIC DATA

2020 ADT 375
2040 ADT 480
TRUCKS 5 %

RAILROAD INVOLVEMENT?
YES / NO

CONSULTING ENGINEERING FIRM

SOUTH CAROLINA
DAVIS & FLOYD INC. ENGINEERING NO. C00538
CERTIFICATE OF AUTHORIZATION

ENGINEER OF RECORD

FOR CONSTRUCTION : _____ _____
DATE

SCALE: 5200.0000 ft / in.
PEN TABLE: 14034-00 Plan-PDF_HALF.tbl
PLOT DRIVER: PDF.pltcfg
FILE: J:\Jobseven\14034-00\Production\Transportation\S-56 over HORSE CREEK 01689\SHEETS\001_14034-00 S56_TITLE SHEET.DGN
10/21/2022

TYPICAL SECTION OF IMPROVEMENT
CHEROKEE COUNTY

CONCEPTUAL PLANS

FED. ROAD DIV.NO.	STATE	COUNTY	CONTRACT ID	ROUTE NO.	SHEET NO.	TOTAL SHEETS
3	S.C.	CHEROKEE	1162220	S-56	3	

NOTES:

1. WHERE NEW HOT MIX ASPHALT (HMA) PAVEMENT TIES IN WITH EXISTING PAVEMENT AT THE PROJECT TERMINI, VARIABLE MILL AS NECESSARY TO PROVIDE A SMOOTH TRANSITION BETWEEN EXISTING AND NEW HMA SURFACE. IF PROFILE DIFFERENTIAL BETWEEN NEW AND EXISTING DOES NOT ALLOW FOR A BUTT JOINT, TIE IN WITH HMA SURFACE OVER A MINIMUM LENGTH OF 100 FEET. TIE DOWN DRIVEWAYS WITH HMA MATCHING MAINLINE TYPE TO THE BACK OF THE RIGHT OF WAY OR AS DIRECTED BY RCE. TIE DOWN INTERSECTING ROUTES WITH HMA MATCHING MAINLINE TYPE, REMOVE OR OTHERWISE MODIFY EXISTING PAVEMENT IN ACCORDANCE WITH SECTION 205.4.5 OF THE STANDARD SPECIFICATIONS PRIOR TO PLACEMENT OF NEW EMBANKMENT.

2. IN AREAS WHERE EXISTING PAVEMENTS ARE WIDENED OUTSIDE THE TRAVEL LANES, USE 400 PSY OF SHOULDER WIDENING MATERIAL AND OVERLAY WITH SURFACE COURSE AT THE RATE SPECIFIED FOR THAT ROAD. WHERE LEVELING, BUILD-UP OR CROSS SLOPE CORRECTION IS REQUIRED, USE HMA SURFACE TYPE E FOR 0 TO 1.5 INCHES. USE INTERMEDIATE C OR SURFACE TYPE C FOR ANYTHING GREATER THAN 1.5 INCHES. PROVIDE FULL DEPTH ASPHALT PAVEMENT PATCHING AS DIRECTED PER EXHIBIT 5. PATCHING QUANTITY IN EXHIBIT 5 INCLUDES BRIDGE APPROACHES AND DETOUR ROUTES. PLACEMENT AND SELECTION OF MIXES SHALL BE IN ACCORDANCE WITH ASPHALT MIX DESIGN GUIDELINES FOUND HERE: HTTP://WWW.SCDOT.ORG/BUSINESS/PDF/MATERIALS-RESEARCH/GUIDELINES_ASPHALT_MIX_SELECTION.PDF

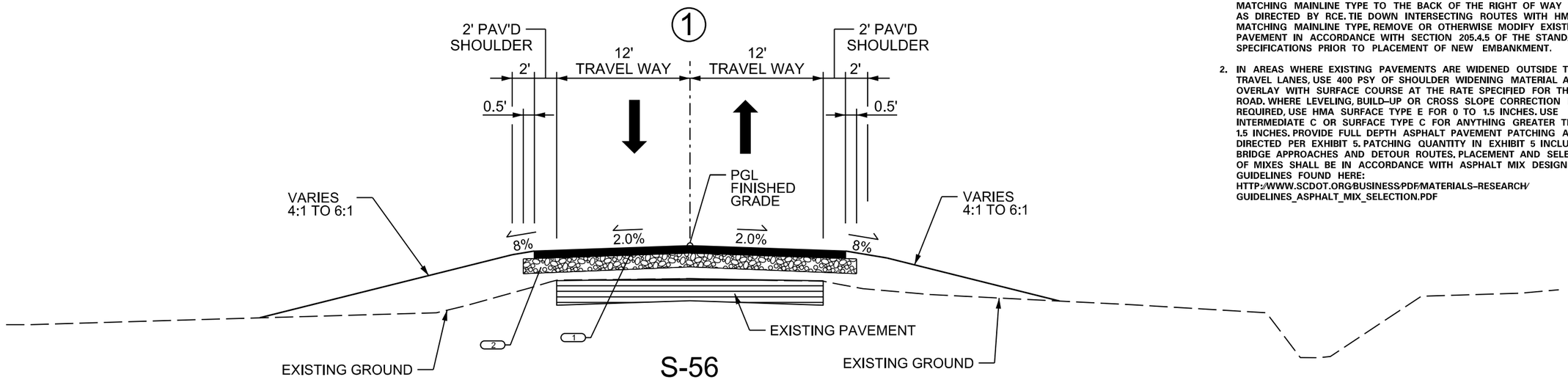

S-56

STA. 31+00.00 TO STA. 34+05.00
STA. 34+55.00 TO STA. 37+50.00

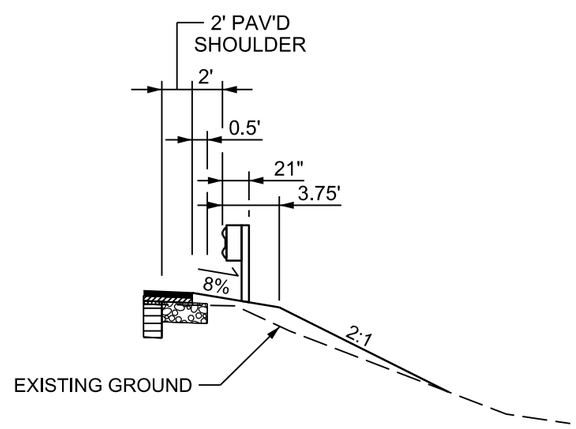

GUARDRAIL DETAIL

FUNCTIONAL CLASSIFICATION:
S-56 - RURAL LOCAL GROUP 4

1 HMA SURFACE COURSE TYPE C OR TYPE D (175 LB/SY)

2 8" GABC

RTE. S-56		30 MPH
MPH	FROM STA.	TO STA.
30	31+00.00	37+50.00

SOUTH CAROLINA DAVIS & FLOYD, INC. No. C00538 CERTIFICATE OF AUTHORIZATION

240 STONERIDGE DRIVE, SUITE 305
COLUMBIA, SC 29210
(803) 256-4121

DAVIS & FLOYD
SINCE 1954

REV. NO.	BY	DATE	DESCRIPTION OF REVISION
5			
4			
3			
2			
1			

DESIGNED BY ____ DRAWN BY ____ CHECKED BY ____

SOUTH CAROLINA
DEPARTMENT OF TRANSPORTATION
ROAD DESIGN COLUMBIA, S.C.

DB 14 BRIDGE PLANS
TYPICAL SECTION SHEET
S-56 (MONTGOMERY DRIVE)

SCALE 1"= 50' HOR. 1" = 10' VER. PLOT SIZE = 22" x 34"

SCALE: 100.0000 ft / in.
PEN TABLE: 14034-00 Plan-PDF_HALF.tbl
PLOT DRIVER: PDF.pltcfg
FILE: J:\Jobseven\14034-00\Production\Transportation\S-56 over HORSE CREEK 01689\SHEETS\003_14034-00 S56_TYPICAL SHEETS.DGN
10/21/2022

CONCEPTUAL PLANS

FED. ROAD DIV.NO.	STATE	COUNTY	CONTRACT ID	ROUTE NO.	SHEET NO.	TOTAL SHEETS
3	S.C.	CHEROKEE	1162220	S-56	6	

℄ EX_S56_6
PI Sta 34+78.01
Δ = 2° 03' 56" (RT)
Dc = 1° 00' 00"
T = 103.30'
L = 206.57'
R = 5,729.64'
E = 0.93'
Ds = 30
e(max) = 6%
e = NC
LG PC = 0.66%
LG PT = 0.66%

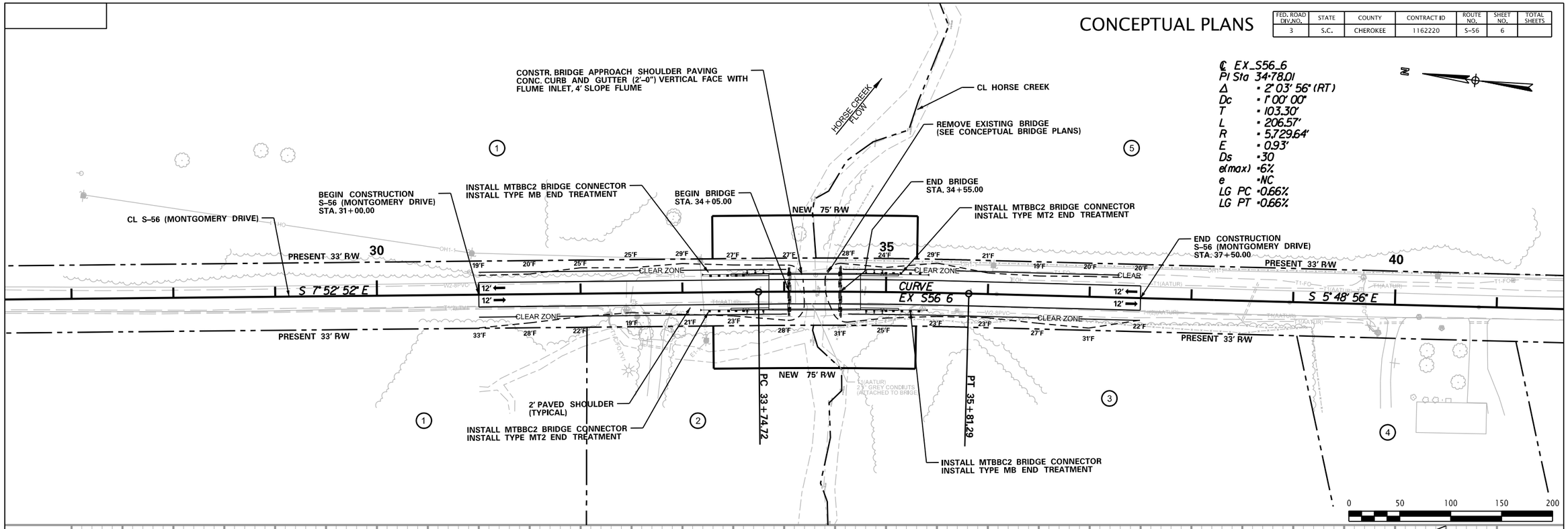

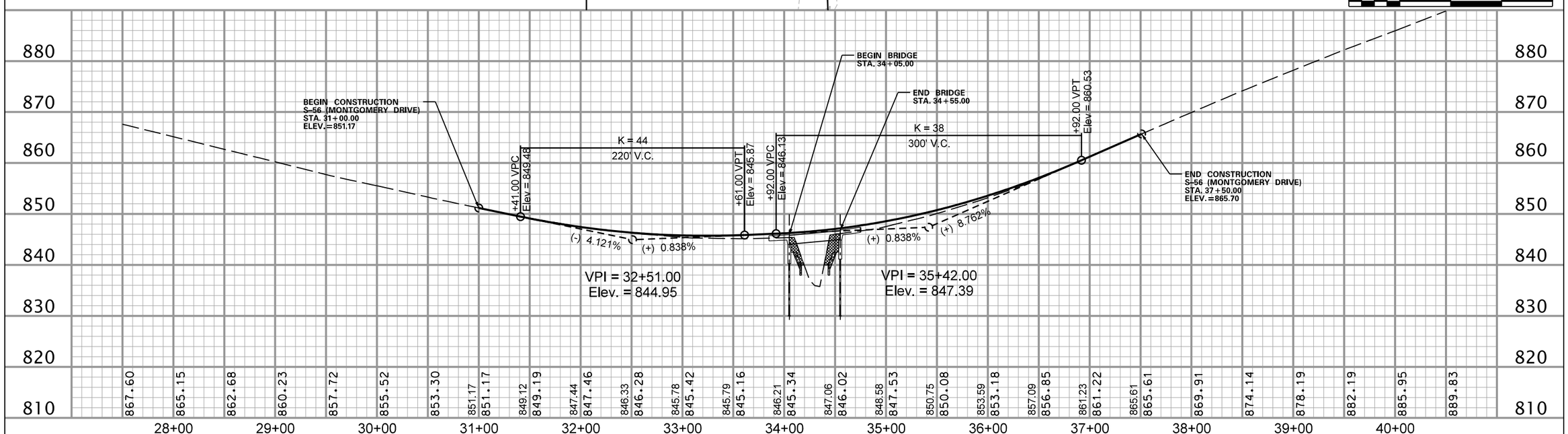

SCALE: 100.0000 ft / in.
PEN TABLE: 14034-00 Plan-PDF_HALF.tbl
PLOT DRIVER: PDF.pltcfg
FILE: J:\JobsEven\14034-00\Production\Transportation\S-56 over HORSE CREEK 01689\SHEETS\006_14034-00 S56_PLAN SHEETS.DGN
10/21/2022

SOUTH CAROLINA DAVIS & FLOYD, INC. No. C00538 CERTIFICATE OF AUTHORIZATION

240 STONERIDGE DRIVE, SUITE 305
COLUMBIA, SC 29210
(803) 256-4121

DAVIS & FLOYD
SINCE 1954

REV. NO.	BY	DATE	DESCRIPTION OF REVISION
5			
4			
3			
2			
1			

DESIGNED BY ____ DRAWN BY ____ CHECKED BY ____

SOUTH CAROLINA
DEPARTMENT OF TRANSPORTATION
ROAD DESIGN COLUMBIA, S.C.

DB 14 BRIDGE PLANS
PLAN & PROFILE SHEET
S-56 (MONTGOMERY DRIVE)

SCALE 1"= 50' HOR. 1" = 10' VER. PLOT SIZE = 22" x 34"

CONCEPTUAL PLANS

FED. RD. DIV. NO.	STATE	COUNTY	ROUTE NAME	SHEET NO.	TOTAL SHEETS
3	S.C.	CHEROKEE	S-86	1	4

INDEX OF SHEETS		
SHEET #	DESCRIPTION	SHEET TOTALS
1	Title Sheet	1
3	Typical Sections	1
6	Plan and Profile Sheets	1
X1	Cross Section Sheet	1
	TOTAL SHEETS	4

South Carolina Department of Transportation

Design Reference for these plans is the:

2022

REQUEST FOR PROPOSALS INSTRUCTIONS
BRIDGE PACKAGE 14

APPROXIMATE PROJECT LOCATION: CHEROKEE COUNTY

CONCEPTUAL PLANS FOR

CHEROKEE COUNTY
PROPOSED S-86 (ROCK HOUSE RD.) BRIDGE REPLACEMENT OVER KINGS CREEK
CONTRACT ID: 1162220

NPDES PERMIT INFORMATION

Disturbed Area = TBD Acre(s)

Permitted Area = TBD

Approximate Location of Roadway is

Begin
Latitude 35°08'46"N
Longitude 81°24'36"W

End
Latitude 35°08'41"N
Longitude 81°24'29"W

Hydraulic and NPDES Design provided by:

Davis & Floyd, Inc.

3 DAYS BEFORE DIGGING IN SOUTH CAROLINA

CALL 811

SOUTH CAROLINA 811 (SC811)
WWW.SC811.COM
ALL UTILITIES MAY NOT BE A MEMBER OF SC811.

CONSTRUCTION LIMITS S-86
STA. 47+25.00 TO STA. 54+35.00

BRIDGE LIMITS FOR S-86
STA. 49+03.00 TO STA. 50+63.00
NOTE: BRIDGE PLANS BOUND UNDER SEPARATE COVER

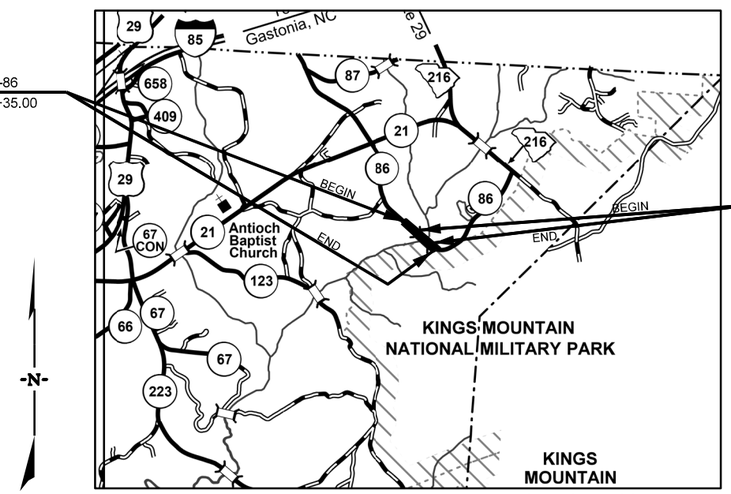

LAYOUT
SCALE = N.T.S.

CHEROKEE COUNTY

DAVIS & FLOYD
SINCE 1954

240 STONERIDGE DRIVE, SUITE 306
COLUMBIA, SC 29210
(803) 256-4121

	S-86	TOTAL	
NET LENGTH OF ROADWAY	0.104	0.104	MILES
NET LENGTH OF BRIDGES	0.030	0.030	MILES
NET LENGTH OF PROJECT	0.134	0.134	MILES
LENGTH OF EXCEPTIONS	0.000	0.000	MILES
GROSS LENGTH OF PROJECT	0.134	0.134	MILES

EQUALITIES IN STATIONING
N/A

NOTE: EXCEPT AS MAY OTHERWISE BE SPECIFIED ON THE PLANS OR IN THE SPECIAL PROVISIONS, ALL MATERIALS AND WORKMANSHIP ON THIS PROJECT SHALL CONFORM TO THE SOUTH CAROLINA DEPARTMENT OF TRANSPORTATION STANDARD SPECIFICATIONS FOR HIGHWAY CONSTRUCTION (2007 EDITION) AND THE STANDARD DRAWINGS FOR ROAD CONSTRUCTION IN EFFECT AT THE TIME OF LETTING.

TRAFFIC DATA

2020 ADT 200

2040 ADT 256

TRUCKS 5 %

RAILROAD INVOLVEMENT?
YES / NO

CONSULTING ENGINEERING FIRM

SOUTH CAROLINA
DAVIS & FLOYD INC.
ENGINEERING
NO. C00538
CERTIFICATE OF AUTHORIZATION

ENGINEER OF RECORD

FOR CONSTRUCTION : _____ _____
DATE

SCALE: 5200.0000 ft / in.
PEN TABLE: 14034-00 Plan-PDF_HALF.tbl
PLOT DRIVER: PDF.pltcfg
FILE: J:\Jobs$even\14034-00\Production\Transportation\S-86 over KINGS CREEK 02488\SHEETS\001_14034-00 S86_TITLE SHEET.DGN
10/21/2022

TYPICAL SECTION OF IMPROVEMENT
CHEROKEE COUNTY

CONCEPTUAL PLANS

FED. ROAD DIV.NO.	STATE	COUNTY	CONTRACT ID	ROUTE NO.	SHEET NO.	TOTAL SHEETS
3	S.C.	CHEROKEE	1162220	S-86	3	

NOTES:

1. WHERE NEW HOT MIX ASPHALT (HMA) PAVEMENT TIES IN WITH EXISTING PAVEMENT AT THE PROJECT TERMINI, VARIABLE MILL AS NECESSARY TO PROVIDE A SMOOTH TRANSITION BETWEEN EXISTING AND NEW HMA SURFACE. IF PROFILE DIFFERENTIAL BETWEEN NEW AND EXISTING DOES NOT ALLOW FOR A BUTT JOINT, TIE IN WITH HMA SURFACE OVER A MINIMUM LENGTH OF 100 FEET. TIE DOWN DRIVEWAYS WITH HMA MATCHING MAINLINE TYPE TO THE BACK OF THE RIGHT OF WAY OR AS DIRECTED BY RCE. TIE DOWN INTERSECTING ROUTES WITH HMA MATCHING MAINLINE TYPE. REMOVE OR OTHERWISE MODIFY EXISTING PAVEMENT IN ACCORDANCE WITH SECTION 205.4.5 OF THE STANDARD SPECIFICATIONS PRIOR TO PLACEMENT OF NEW EMBANKMENT.

2. IN AREAS WHERE EXISTING PAVEMENTS ARE WIDENED OUTSIDE THE TRAVEL LANES, USE 400 PSY OF SHOULDER WIDENING MATERIAL AND OVERLAY WITH SURFACE COURSE AT THE RATE SPECIFIED FOR THAT ROAD. WHERE LEVELING, BUILD-UP OR CROSS SLOPE CORRECTION IS REQUIRED, USE HMA SURFACE TYPE E FOR 0 TO 1.5 INCHES. USE INTERMEDIATE C OR SURFACE TYPE C FOR ANYTHING GREATER THAN 1.5 INCHES. PROVIDE FULL DEPTH ASPHALT PAVEMENT PATCHING AS DIRECTED PER EXHIBIT 5. PATCHING QUANTITY IN EXHIBIT 5 INCLUDES BRIDGE APPROACHES AND DETOUR ROUTES. PLACEMENT AND SELECTION OF MIXES SHALL BE IN ACCORDANCE WITH ASPHALT MIX DESIGN GUIDELINES FOUND HERE: HTTP://WWW.SCDOT.ORG/BUSINESS/PDF/MATERIALS-RESEARCH/GUIDELINES_ASPHALT_MIX_SELECTION.PDF

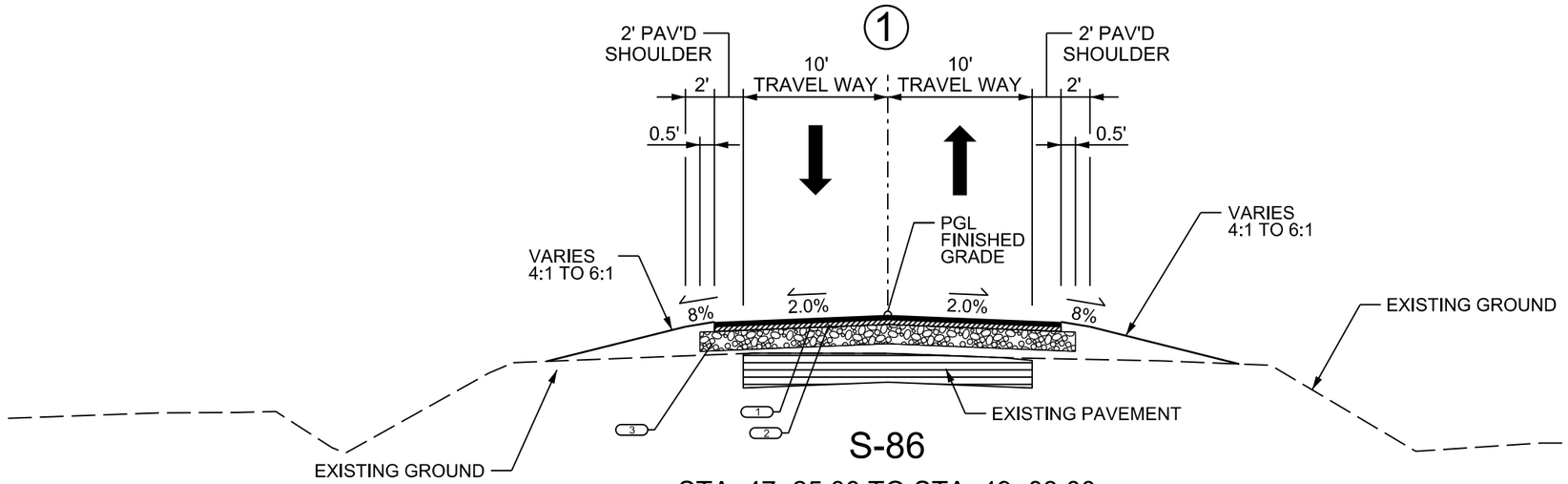

S-86

STA. 47+25.00 TO STA. 49+03.00
STA. 50+63.00 TO STA. 54+35.00

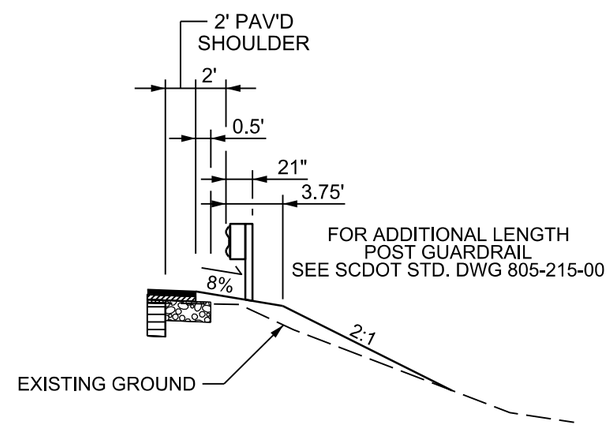

GUARDRAIL DETAIL

FUNCTIONAL CLASSIFICATION:
S-86 - RURAL LOCAL GROUP 4

1. HMA SURFACE COURSE TYPE C OR TYPE D (150 LB/SY)
2. HMA SURFACE COURSE TYPE C OR D (175 LB/SY) OR HMA INTERMEDIATE COURSE TYPE B OR C (200 LB/SY)
3. 10" GABC

RTE. S-86		50 MPH
MPH	FROM STA.	TO STA.
50	47+25.00	54+35.00

SOUTH CAROLINA DAVIS & FLOYD, INC. No. C00538 CERTIFICATE OF AUTHORIZATION

240 STONERIDGE DRIVE, SUITE 305
COLUMBIA, SC 29210
(803) 256-4121

DAVIS & FLOYD
SINCE 1954

REV. NO.	BY	DATE	DESCRIPTION OF REVISION
5			
4			
3			
2			
1			

DESIGNED BY ____ DRAWN BY ____ CHECKED BY ____

SOUTH CAROLINA
DEPARTMENT OF TRANSPORTATION
ROAD DESIGN COLUMBIA, S.C.

DB 14 BRIDGE PLANS
TYPICAL SECTION SHEET
S-86 (ROCK HOUSE RD.)

SCALE 1"= 50' HOR. 1" = 10' VER. PLOT SIZE = 22" x 34"

SCALE: 100.0000 ft / in.
PEN TABLE: 14034-00 Plan-PDF_HALF.tbl
PLOT DRIVER: PDF.pltcfg
FILE: J:\JobsEven\14034-00\Production\Transportation\S-86 over KINGS CREEK 02488\SHEETS\003_14034-00 S86_TYPICAL SHEETS.DGN
10/21/2022

CONCEPTUAL PLANS

FED. ROAD DIV.NO.	STATE	COUNTY	CONTRACT ID	ROUTE NO.	SHEET NO.	TOTAL SHEETS
3	S.C.	CHEROKEE	1162220	S-86	6	

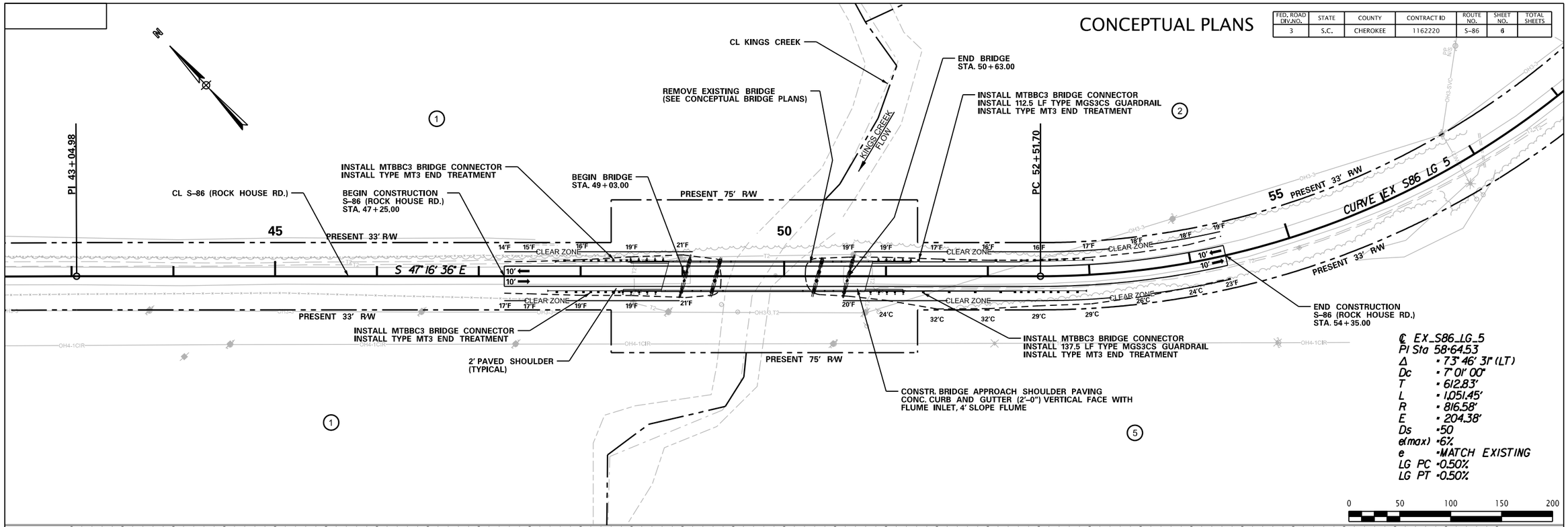

SCALE: 100.0000 ft / in.
PEN TABLE: 14034-00 Plan-PDF_HALF.tbl
PLOT DRIVER: PDF.pltcfg
FILE: J:\JobsEven\14034-00\Production\Transportation\S-86 over KINGS CREEK 02488\SHEETS\006_14034-00 S86_PLAN SHEETS.DGN
10/21/2022

SOUTH CAROLINA DAVIS & FLOYD, INC. No. C00538 CERTIFICATE OF AUTHORIZATION

240 STONERIDGE DRIVE, SUITE 305
COLUMBIA, SC 29210
(803) 256-4121

DAVIS & FLOYD
SINCE 1954

REV. NO.	BY	DATE	DESCRIPTION OF REVISION
5			
4			
3			
2			
1			

DESIGNED BY ____ DRAWN BY ____ CHECKED BY ____

SOUTH CAROLINA
DEPARTMENT OF TRANSPORTATION
ROAD DESIGN COLUMBIA, S.C.

DB 14 BRIDGE PLANS
PLAN & PROFILE SHEET
S-86 (ROCK HOUSE RD.)

SCALE 1"= 50' HOR. 1" = 10' VER. PLOT SIZE = 22" x 34"

CONCEPTUAL PLANS

STATE	COUNTY	CONTRACT ID	ROAD NAME	SHEET NO.	TOTAL SHEETS
S.C.	CHEROKEE	1162220	S-86	X1	

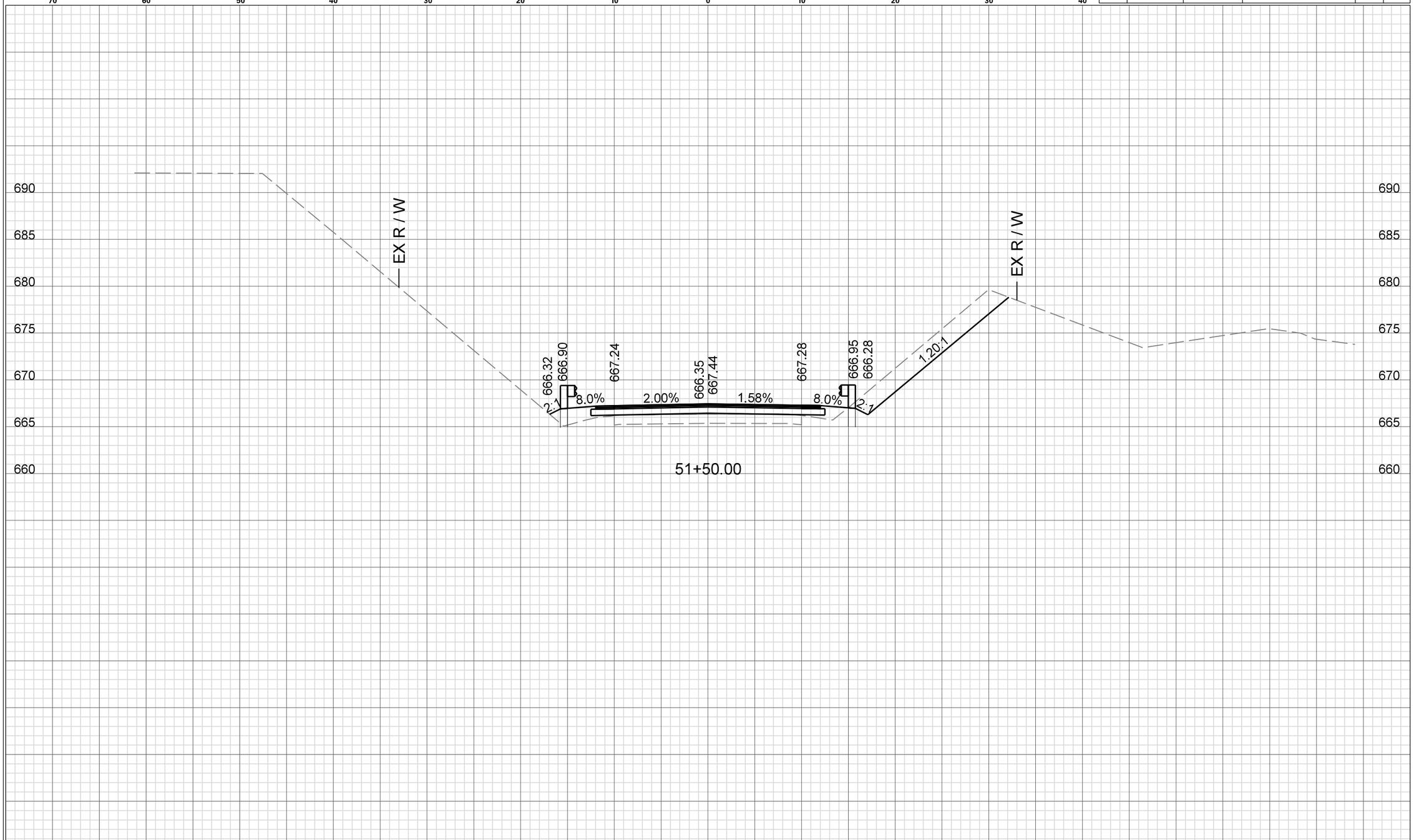

REV. NO.	BY	DATE	DESCRIPTION OF REVISION
4			
3			
2			
1			

DGN. _____ DATE _____
R/W _____ DATE _____
CHK. _____ DATE _____

SOUTH CAROLINA
DAVIS & FLOYD, INC.
No. C00538
CERTIFICATE OF AUTHORIZATION

S-86

STA. 51+50.00

SCALE: 1"=5' HOR. 1"=5' VERT.

SCALE: 10.0958 ft / in.
PEN TABLE: J:\JobsEven\14034-00\Production\Transportation\SCDOT Levels 2015 X Sections.tbl
PLOT DRIVER: G:\Resource\Standards\Bentley\Transportation\DF STANDARDS\MSfiles\plotting\PDF.pltcfg
FILE: J:\JobsEven\14034-00\Production\Transportation\S-86 over KINGS CREEK 02488\CROSS SECTIONS\Cross Section Sheets\14034.00 S86 XSC EXHIBIT.dgn
10/21/2022

CONCEPTUAL PLANS

FED. RD. DIV. NO.	STATE	COUNTY	ROUTE NAME	SHEET NO.	TOTAL SHEETS
3	S.C.	CHEROKEE	S-106	1	4

INDEX OF SHEETS		
SHEET #	DESCRIPTION	SHEET TOTALS
1	Title Sheet	1
3	Typical Sections	1
6	Plan and Profile Sheets	1
X1	Cross Section Sheet	1

South Carolina Department of Transportation

Design Reference for these plans is the:

2022

REQUEST FOR PROPOSALS INSTRUCTIONS
BRIDGE PACKAGE 14

APPROXIMATE PROJECT LOCATION: CHEROKEE COUNTY

CONCEPTUAL PLANS FOR

CHEROKEE COUNTY
PROPOSED S-106 (ISLAND CREEK RD.) BRIDGE REPLACEMENT OVER SUCK CREEK

CONTRACT ID: 1162220

NPDES PERMIT INFORMATION

Disturbed Area = TBD Acre(s)

Permitted Area = TBD

Approximate Location of Roadway is

Begin
Latitude 35°07'24"N
Longitude 81°50'06"W

End
Latitude 35° 7'22"N
Longitude 81°49'58"W

Hydraulic and NPDES Design provided by:

Davis & Floyd, Inc.

3 DAYS BEFORE DIGGING IN SOUTH CAROLINA

CALL 811

SOUTH CAROLINA 811 (SC811)
WWW.SC811.COM
ALL UTILITIES MAY NOT BE A MEMBER OF SC811.

240 STONEBRIDGE DRIVE, SUITE 306
COLUMBIA, SC 29210
(803) 256-4121

DAVIS & FLOYD

SINCE 1954

CONSTRUCTION LIMITS S-106
STA. 29+15.00 TO STA. 35+50.00

BRIDGE LIMITS FOR S-106
STA. 31+70.00 TO STA. 32+30.00
NOTE: BRIDGE PLANS BOUND UNDER SEPARATE COVER

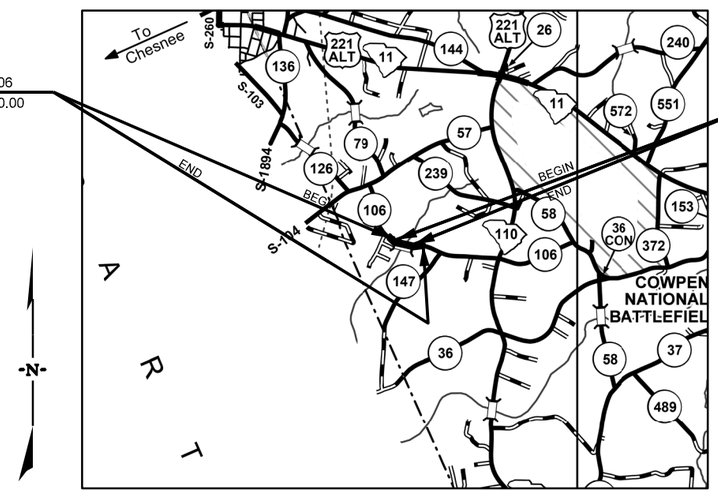

LAYOUT
SCALE = N.T.S.

CHEROKEE COUNTY

	S-106	TOTAL	
NET LENGTH OF ROADWAY	0.109	0.109	MILES
NET LENGTH OF BRIDGES	0.011	0.011	MILES
NET LENGTH OF PROJECT	0.120	0.120	MILES
LENGTH OF EXCEPTIONS	0.000	0.000	MILES
GROSS LENGTH OF PROJECT	0.120	0.120	MILES

EQUALITIES IN STATIONING
N/A

NOTE: EXCEPT AS MAY OTHERWISE BE SPECIFIED ON THE PLANS OR IN THE SPECIAL PROVISIONS, ALL MATERIALS AND WORKMANSHIP ON THIS PROJECT SHALL CONFORM TO THE SOUTH CAROLINA DEPARTMENT OF TRANSPORTATION STANDARD SPECIFICATIONS FOR HIGHWAY CONSTRUCTION (2007 EDITION) AND THE STANDARD DRAWINGS FOR ROAD CONSTRUCTION IN EFFECT AT THE TIME OF LETTING.

TRAFFIC DATA

2020	ADT	225
2040	ADT	329

TRUCKS 8 %

RAILROAD INVOLVEMENT?
YES / NO

CONSULTING ENGINEERING FIRM

SOUTH CAROLINA
DAVIS & FLOYD INC.
ENGINEERING
NO. C00538
CERTIFICATE OF AUTHORIZATION

ENGINEER OF RECORD

FOR CONSTRUCTION : _____ DATE

SCALE: 5200.0000 ft / in.
PEN TABLE: 14034-00 Plan-PDF_HALF.tbl
PLOT DRIVER: PDF.pltcfg
FILE: J:\JobsEven\14034-00\Production\Transportation\S-106 over SUCK CREEK 02149\SHEETS\001_14034-00 S106_TITLE SHEET.DGN
10/21/2022

TYPICAL SECTION OF IMPROVEMENT
CHEROKEE COUNTY

CONCEPTUAL PLANS

FED. ROAD DIV.NO.	STATE	COUNTY	CONTRACT ID	ROUTE NO.	SHEET NO.	TOTAL SHEETS
3	S.C.	CHEROKEE	1162220	S-106	3	

NOTES:

1. WHERE NEW HOT MIX ASPHALT (HMA) PAVEMENT TIES IN WITH EXISTING PAVEMENT AT THE PROJECT TERMINI, VARIABLE MILL AS NECESSARY TO PROVIDE A SMOOTH TRANSITION BETWEEN EXISTING AND NEW HMA SURFACE. IF PROFILE DIFFERENTIAL BETWEEN NEW AND EXISTING DOES NOT ALLOW FOR A BUTT JOINT, TIE IN WITH HMA SURFACE OVER A MINIMUM LENGTH OF 100 FEET. TIE DOWN DRIVEWAYS WITH HMA MATCHING MAINLINE TYPE TO THE BACK OF THE RIGHT OF WAY OR AS DIRECTED BY RCE. TIE DOWN INTERSECTING ROUTES WITH HMA MATCHING MAINLINE TYPE. REMOVE OR OTHERWISE MODIFY EXISTING PAVEMENT IN ACCORDANCE WITH SECTION 205.4.5 OF THE STANDARD SPECIFICATIONS PRIOR TO PLACEMENT OF NEW EMBANKMENT.

2. IN AREAS WHERE EXISTING PAVEMENTS ARE WIDENED OUTSIDE THE TRAVEL LANES, USE 400 PSY OF SHOULDER WIDENING MATERIAL AND OVERLAY WITH SURFACE COURSE AT THE RATE SPECIFIED FOR THAT ROAD. WHERE LEVELING, BUILD-UP OR CROSS SLOPE CORRECTION IS REQUIRED, USE HMA SURFACE TYPE E FOR 0 TO 1.5 INCHES. USE INTERMEDIATE C OR SURFACE TYPE C FOR ANYTHING GREATER THAN 1.5 INCHES. PROVIDE FULL DEPTH ASPHALT PAVEMENT PATCHING AS DIRECTED PER EXHIBIT 5. PATCHING QUANTITY IN EXHIBIT 5 INCLUDES BRIDGE APPROACHES AND DETOUR ROUTES. PLACEMENT AND SELECTION OF MIXES SHALL BE IN ACCORDANCE WITH ASPHALT MIX DESIGN GUIDELINES FOUND HERE: HTTP://WWW.SCDOT.ORG/BUSINESS/PDF/MATERIALS-RESEARCH/GUIDELINES_ASPHALT_MIX_SELECTION.PDF

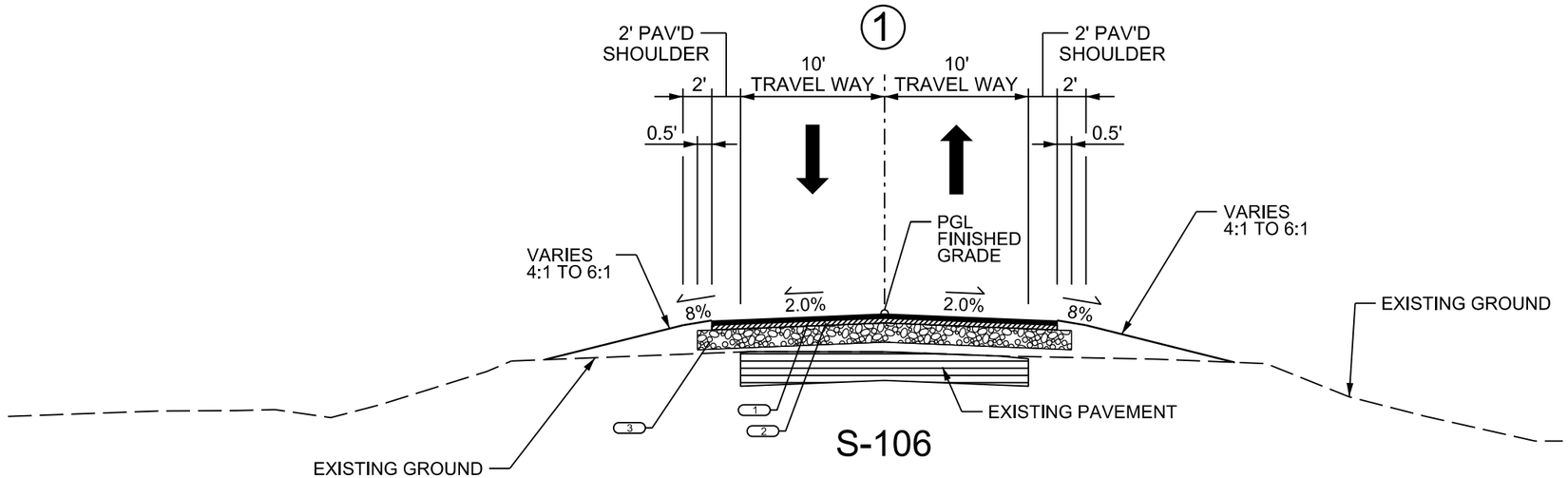

S-106

STA. 29+15.00 TO STA. 31+70.00
STA. 32+30.00 TO STA. 35+50.00

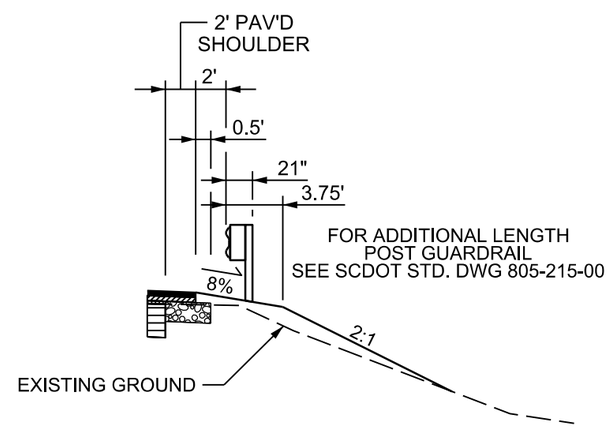

GUARDRAIL DETAIL

FUNCTIONAL CLASSIFICATION:
S-106 - RURAL MAJOR COLLECTOR

1 HMA SURFACE COURSE TYPE C OR TYPE D (150 LB/SY)

2 HMA SURFACE COURSE TYPE C OR D (175 LB/SY) OR HMA INTERMEDIATE COURSE TYPE B OR C (200 LB/SY)

3 10" GABC

RTE. S-106 — 35 MPH

MPH	FROM STA.	TO STA.
35	29+15.00	35+50.00

SOUTH CAROLINA DAVIS & FLOYD, INC. No. C00538 CERTIFICATE OF AUTHORIZATION

240 STONERIDGE DRIVE, SUITE 305
COLUMBIA, SC 29210
(803) 256-4121

DAVIS & FLOYD
SINCE 1954

REV. NO.	BY	DATE	DESCRIPTION OF REVISION
5			
4			
3			
2			
1			

DESIGNED BY ____ DRAWN BY ____ CHECKED BY ____

SOUTH CAROLINA
DEPARTMENT OF TRANSPORTATION
ROAD DESIGN COLUMBIA, S.C.

DB 14 BRIDGE PLANS
TYPICAL SECTION SHEET
S-106 (ISLAND CREEK RD.)

SCALE 1"= 50' HOR. 1" = 10' VER. PLOT SIZE = 22" x 34"

SCALE: 100.0000 ft / in.
PEN TABLE: 14034-00 Plan-PDF_HALF.tbl
PLOT DRIVER: PDF.pltcfg
FILE: J:\JobsEven\14034-00\Production\Transportation\S-106 over SUCK CREEK 02149\SHEETS\003_14034-00 S106_TYPICAL SHEETS.DGN
10/21/2022

CONCEPTUAL PLANS

FED. ROAD DIV.NO.	STATE	COUNTY	CONTRACT ID	ROUTE NO.	SHEET NO.	TOTAL SHEETS
3	S.C.	CHEROKEE	1162220	S-106	6	

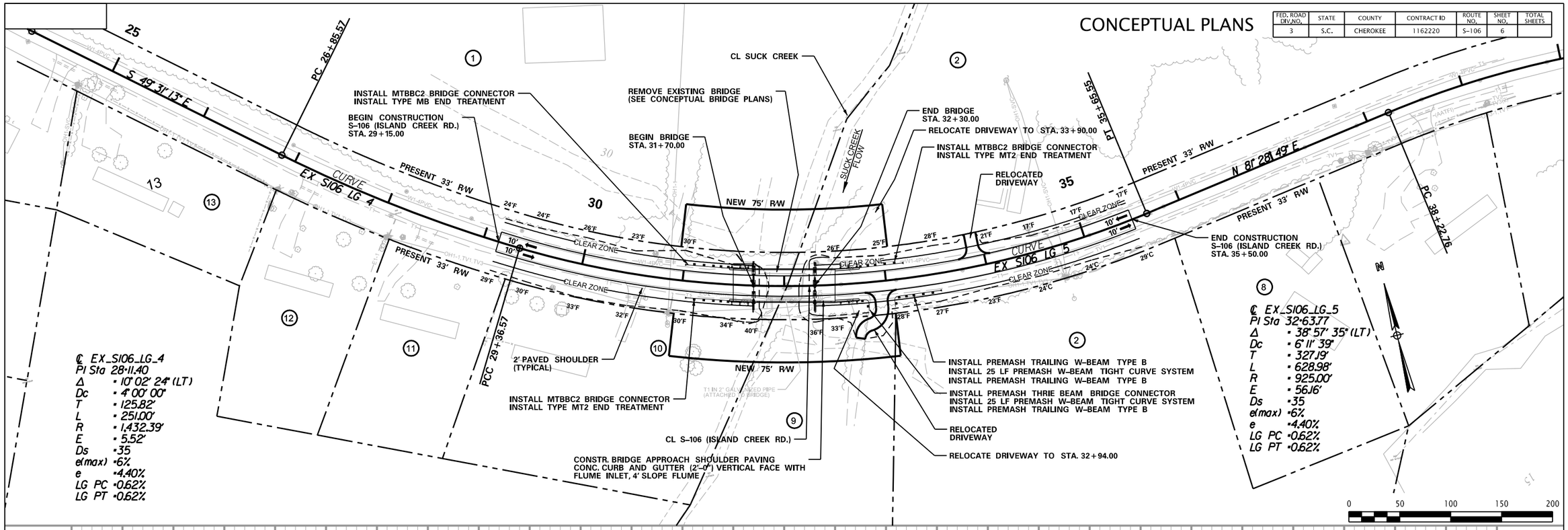

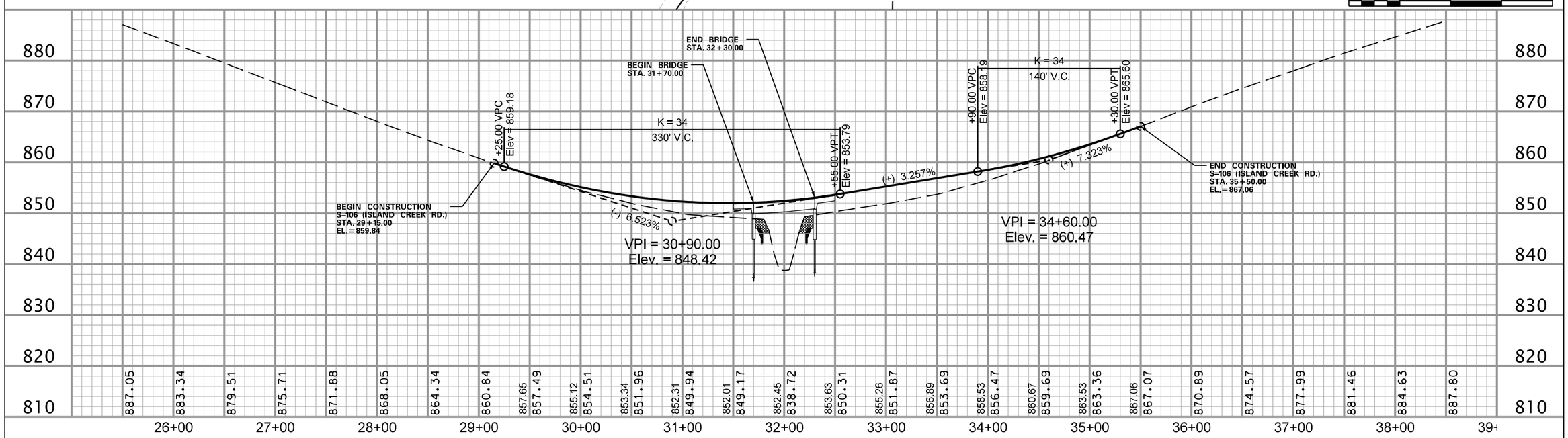

SCALE: 100.0000 ft / in.
PEN TABLE: 14034-00 Plan-PDF_HALF.tbl
PLOT DRIVER: PDF.pltcfg
FILE: J:\JobsEven\14034-00\Production\Transportation\S-106 over SUCK CREEK 02149\SHEETS\006_14034-00 S106_PLAN SHEETS.DGN
10/21/2022

SOUTH CAROLINA DAVIS & FLOYD, INC. No. C00538 CERTIFICATE OF AUTHORIZATION

DAVIS & FLOYD
SINCE 1954

240 STONERIDGE DRIVE, SUITE 305
COLUMBIA, SC 29210
(803) 256-4121

REV. NO.	BY	DATE	DESCRIPTION OF REVISION
5			
4			
3			
2			
1			

DESIGNED BY ____ DRAWN BY ____ CHECKED BY ____

SOUTH CAROLINA
DEPARTMENT OF TRANSPORTATION
ROAD DESIGN COLUMBIA, S.C.

DB 14 BRIDGE PLANS
PLAN & PROFILE SHEET
S-106 (ISLAND CREEK RD.)

SCALE 1"= 50' HOR. 1" = 10' VER. PLOT SIZE = 22" x 34"

CONCEPTUAL PLANS

STATE	COUNTY	CONTRACT ID	ROAD NAME	SHEET NO.	TOTAL SHEETS
S.C.	HORRY	1162220	S-106	X1	

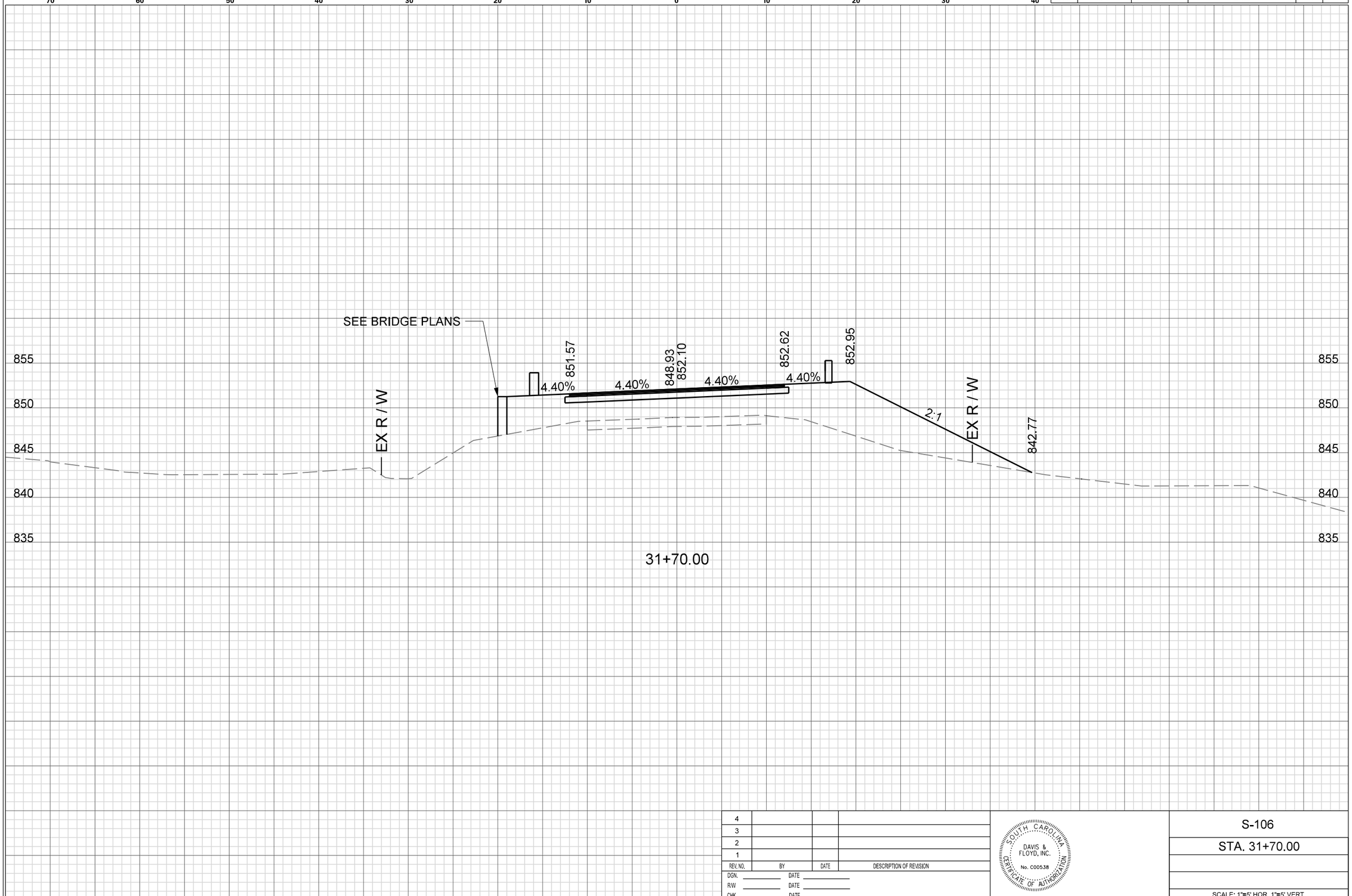

REV. NO.	BY	DATE	DESCRIPTION OF REVISION
4			
3			
2			
1			

DGN. _____ DATE _____
R/W _____ DATE _____
CHK. _____ DATE _____

SOUTH CAROLINA
DAVIS & FLOYD, INC.
No. C005.38
CERTIFICATE OF AUTHORIZATION

S-106

STA. 31+70.00

SCALE: 1"=5' HOR. 1"=5' VERT.

SCALE: 10.0958 ft / in.
PEN TABLE: J:\JobsEven\14034-00\Production\Transportation\SCDOT Levels 2015 X Sections.tbl
PLOT DRIVER: G:\Resource\Standards\Bentley\Transportation\DF STANDARDS\MSfiles\plotting\PDF.pltcfg
FILE: J:\JobsEven\14034-00\Production\Transportation\S-106 over SUCK CREEK 02149\CROSS SECTIONS\Cross Section Sheets\14034-00 S106 XSC EXHIBIT.dgn
10/21/2022

CONCEPTUAL PLANS

FED. RD. DIV. NO.	STATE	COUNTY	ROUTE NAME	SHEET NO.	TOTAL SHEETS
3	S.C.	CHEROKEE	S-138	1	3

INDEX OF SHEETS		
SHEET #	DESCRIPTION	SHEET TOTALS
1	Title Sheet	1
3	Typical Sections	1
6	Plan and Profile Sheets	1
	TOTAL SHEETS	3

South Carolina Department of Transportation

Design Reference for these plans is the:

2022

REQUEST FOR PROPOSALS INSTRUCTIONS
BRIDGE PACKAGE 14

APPROXIMATE PROJECT LOCATION: CHEROKEE COUNTY

CONCEPTUAL PLANS FOR

CHEROKEE COUNTY
PROPOSED S-138 (GOUCHER SCHOOL RD.) BRIDGE REPLACEMENT OVER GOUCHER CREEK
CONTRACT ID: 1162220

NPDES PERMIT INFORMATION

Disturbed Area = TBD Acre(s)

Permitted Area = TBD

Approximate Location of Roadway is

Begin
Latitude 34°58'27"N
Longitude 81°41'39"W

End
Latitude 34°58'33"N
Longitude 81°41'41"W

Hydraulic and NPDES Design provided by:

Davis & Floyd, Inc.

3 DAYS BEFORE DIGGING IN SOUTH CAROLINA

CALL 811

SOUTH CAROLINA 811 (SC811)
WWW.SC811.COM
ALL UTILITIES MAY NOT BE A MEMBER OF SC811.

CONSTRUCTION LIMITS S-138
STA. 86+50.00 TO STA. 92+50.00

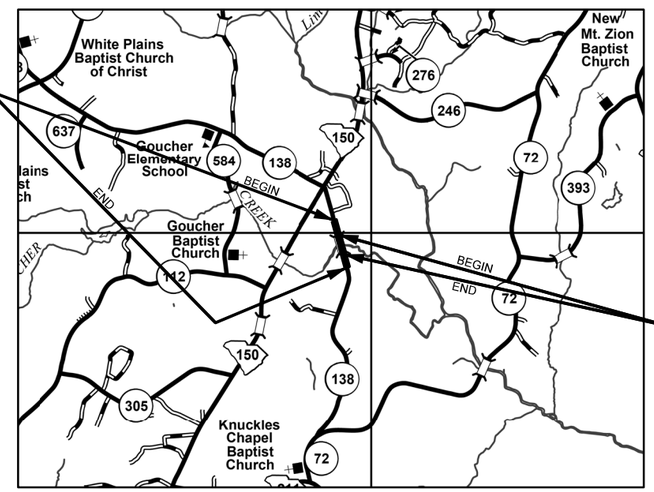

BRIDGE LIMITS FOR S-138
STA. 88+36.25 TO STA. 89+56.25
NOTE: BRIDGE PLANS BOUND UNDER SEPARATE COVER

LAYOUT
SCALE = N.T.S.

CHEROKEE COUNTY

240 STONERIDGE DRIVE, SUITE 305
COLUMBIA, SC 29210
(803) 256-4121

DAVIS & FLOYD

SINCE 1954

	S-138	TOTAL	
NET LENGTH OF ROADWAY	0.091	0.091	MILES
NET LENGTH OF BRIDGES	0.023	0.023	MILES
NET LENGTH OF PROJECT	0.114	0.114	MILES
LENGTH OF EXCEPTIONS	0.000	0.000	MILES
GROSS LENGTH OF PROJECT	0.114	0.114	MILES

EQUALITIES IN STATIONING
N/A

NOTE: EXCEPT AS MAY OTHERWISE BE SPECIFIED ON THE PLANS OR IN THE SPECIAL PROVISIONS, ALL MATERIALS AND WORKMANSHIP ON THIS PROJECT SHALL CONFORM TO THE SOUTH CAROLINA DEPARTMENT OF TRANSPORTATION STANDARD SPECIFICATIONS FOR HIGHWAY CONSTRUCTION (2007 EDITION) AND THE STANDARD DRAWINGS FOR ROAD CONSTRUCTION IN EFFECT AT THE TIME OF LETTING.

TRAFFIC DATA

2020 ADT 750
2040 ADT 1,095
TRUCKS 8 %

RAILROAD INVOLVEMENT?
YES / NO

CONSULTING ENGINEERING FIRM

SOUTH CAROLINA
DAVIS & FLOYD INC.
ENGINEERING
NO. C00538
CERTIFICATE OF AUTHORIZATION

ENGINEER OF RECORD

FOR CONSTRUCTION : _____ DATE

SCALE: 5200.0000 ft / in.
PEN TABLE: 14034-00 Plan-PDF_HALF.tbl
PLOT DRIVER: PDF.pltcfg
FILE: J:\JobsEven\14034-00\Production\Transportation\S-138 over GOUCHER CREEK 02005\SHEETS\001_14034-00 S138_TITLE SHEET.DGN
10/21/2022

TYPICAL SECTION OF IMPROVEMENT
CHEROKEE COUNTY

CONCEPTUAL PLANS

FED. ROAD DIV.NO.	STATE	COUNTY	CONTRACT ID	ROUTE NO.	SHEET NO.	TOTAL SHEETS
3	S.C.	CHEROKEE	1162220	S-138	3	

NOTES:

1. WHERE NEW HOT MIX ASPHALT (HMA) PAVEMENT TIES IN WITH EXISTING PAVEMENT AT THE PROJECT TERMINI, VARIABLE MILL AS NECESSARY TO PROVIDE A SMOOTH TRANSITION BETWEEN EXISTING AND NEW HMA SURFACE. IF PROFILE DIFFERENTIAL BETWEEN NEW AND EXISTING DOES NOT ALLOW FOR A BUTT JOINT, TIE IN WITH HMA SURFACE OVER A MINIMUM LENGTH OF 100 FEET. TIE DOWN DRIVEWAYS WITH HMA MATCHING MAINLINE TYPE TO THE BACK OF THE RIGHT OF WAY OR AS DIRECTED BY RCE. TIE DOWN INTERSECTING ROUTES WITH HMA MATCHING MAINLINE TYPE. REMOVE OR OTHERWISE MODIFY EXISTING PAVEMENT IN ACCORDANCE WITH SECTION 205.4.5 OF THE STANDARD SPECIFICATIONS PRIOR TO PLACEMENT OF NEW EMBANKMENT.

2. IN AREAS WHERE EXISTING PAVEMENTS ARE WIDENED OUTSIDE THE TRAVEL LANES, USE 400 PSY OF SHOULDER WIDENING MATERIAL AND OVERLAY WITH SURFACE COURSE AT THE RATE SPECIFIED FOR THAT ROAD. WHERE LEVELING, BUILD-UP OR CROSS SLOPE CORRECTION IS REQUIRED, USE HMA SURFACE TYPE E FOR 0 TO 1.5 INCHES. USE INTERMEDIATE C OR SURFACE TYPE C FOR ANYTHING GREATER THAN 1.5 INCHES. PROVIDE FULL DEPTH ASPHALT PAVEMENT PATCHING AS DIRECTED PER EXHIBIT 5. PATCHING QUANTITY IN EXHIBIT 5 INCLUDES BRIDGE APPROACHES AND DETOUR ROUTES. PLACEMENT AND SELECTION OF MIXES SHALL BE IN ACCORDANCE WITH ASPHALT MIX DESIGN GUIDELINES FOUND HERE: HTTP://WWW.SCDOT.ORG/BUSINESS/PDF/MATERIALS-RESEARCH/GUIDELINES_ASPHALT_MIX_SELECTION.PDF

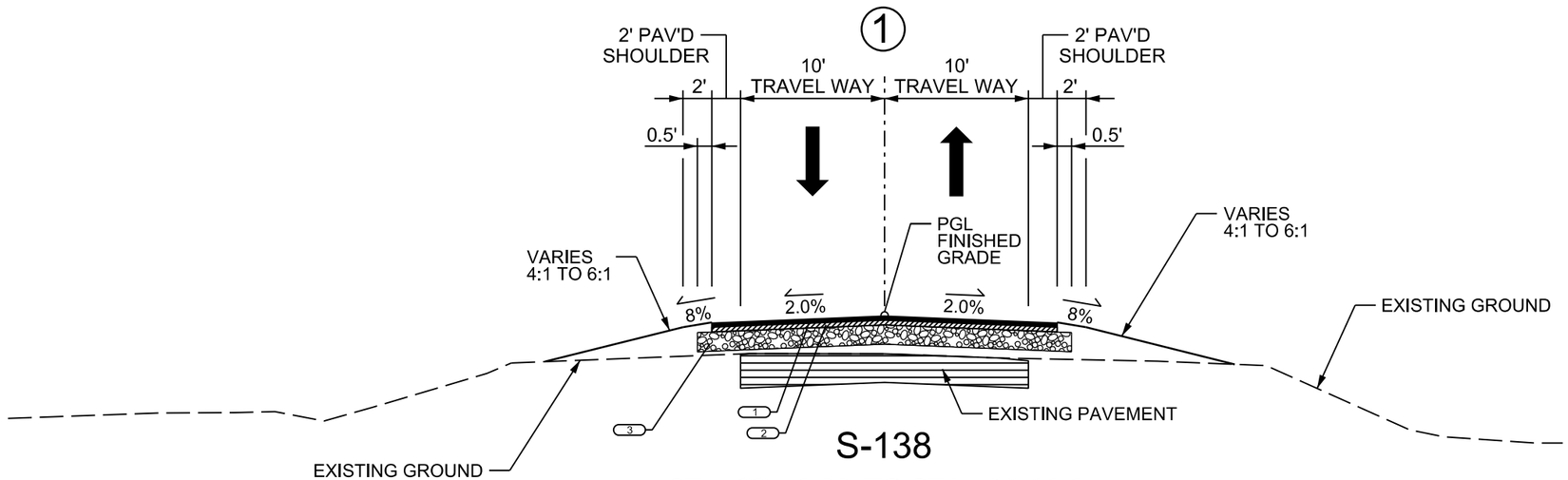

S-138

STA. 86+50.00 TO STA. 88+36.25
STA. 89+56.25 TO STA. 92+50.00

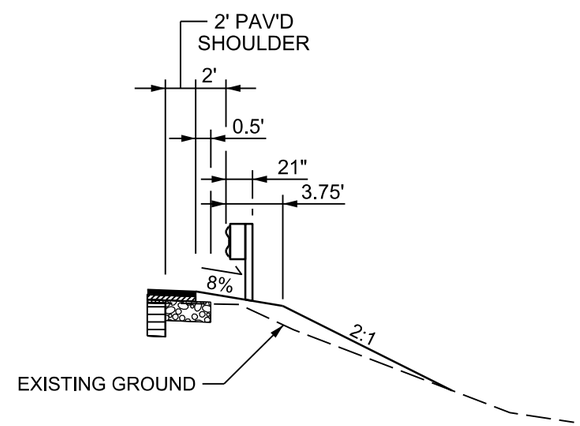

GUARDRAIL DETAIL

FUNCTIONAL CLASSIFICATION:
S-138 - RURAL MAJOR COLLECTOR

1 HMA SURFACE COURSE TYPE C OR TYPE D (175 LB/SY)
2 HMA INTERMEDIATE COURSE TYPE C (300 LB/SY)
3 10" GABC

RTE. S-138 — 50 MPH

MPH	FROM STA.	TO STA.
50	86+50.00	92+50.00

SOUTH CAROLINA — DAVIS & FLOYD, INC. — No. C00538 — CERTIFICATE OF AUTHORIZATION

240 STONEBRIDGE DRIVE, SUITE 305
COLUMBIA, SC 29210
(803) 256-4121

DAVIS & FLOYD
SINCE 1954

REV. NO.	BY	DATE	DESCRIPTION OF REVISION
5			
4			
3			
2			
1			

DESIGNED BY ____ DRAWN BY ____ CHECKED BY ____

SOUTH CAROLINA
DEPARTMENT OF TRANSPORTATION
ROAD DESIGN COLUMBIA, S.C.

DB 14 BRIDGE PLANS
TYPICAL SECTION SHEET
S-138 (GOUCHER SCHOOL RD.)

SCALE 1"= 50' HOR. 1" = 10' VER. PLOT SIZE = 22" x 34"

SCALE: 100.0000 ft / in.
PEN TABLE: 14034-00 Plan-PDF_HALF.tbl
PLOT DRIVER: PDF.pltcfg
FILE: J:\Jobs\Even\14034-00\Production\Transportation\S-138 over GOUCHER CREEK 02005\SHEETS\003_14034-00 S138_TYPICAL SHEETS.DGN
10/21/2022

CONCEPTUAL PLANS

FED. ROAD DIV.NO.	STATE	COUNTY	CONTRACT ID	ROUTE NO.	SHEET NO.	TOTAL SHEETS
3	S.C.	CHEROKEE	1162220	S-138	6	

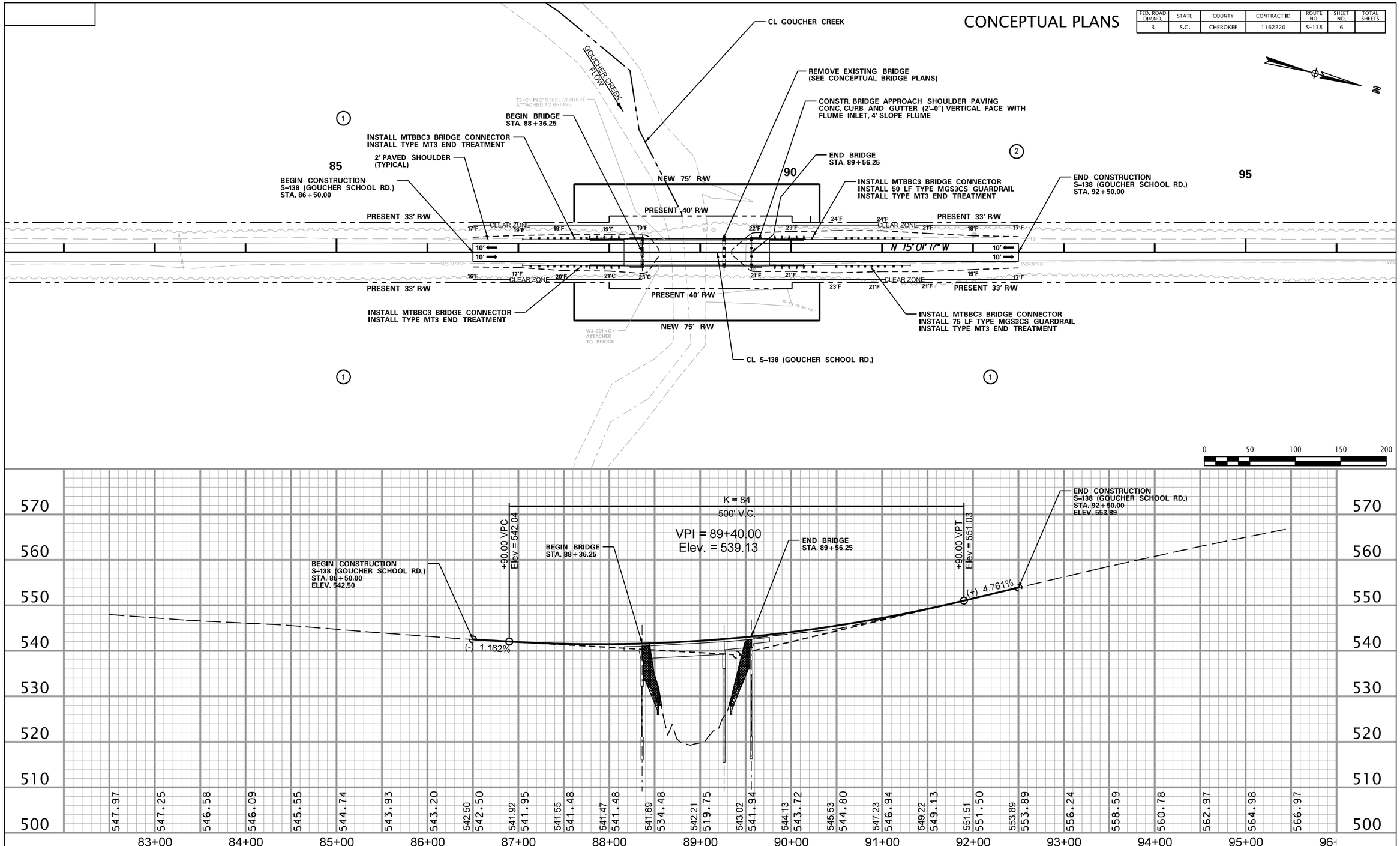

SCALE: 100.0000 ft / in.
PEN TABLE: 14034-00 Plan-PDF_HALF.tbl
PLOT DRIVER: PDF.pltcfg
FILE: J:\Jobs-Even\14034-00\Production\Transportation\S-138 over GOUCHER CREEK 02005\SHEETS\006_14034-00 S138_PLAN SHEETS.DGN
10/21/2022

SOUTH CAROLINA DAVIS & FLOYD, INC. No. C00538 CERTIFICATE OF AUTHORIZATION

240 STONERIDGE DRIVE, SUITE 305 COLUMBIA, SC 29210 (803) 256-4121

DAVIS & FLOYD
SINCE 1954

REV. NO.	BY	DATE	DESCRIPTION OF REVISION
5			
4			
3			
2			
1			

DESIGNED BY ____ DRAWN BY ____ CHECKED BY ____

SOUTH CAROLINA
DEPARTMENT OF TRANSPORTATION
ROAD DESIGN COLUMBIA, S.C.

DB 14 BRIDGE PLANS
PLAN & PROFILE SHEET
S-138 (GOUCHER SCHOOL RD.)

SCALE 1"= 50' HOR. 1" = 10' VER. PLOT SIZE = 22" x 34"

CONCEPTUAL PLANS

FED. RD. DIV. NO.	STATE	COUNTY	ROUTE NAME	SHEET NO.	TOTAL SHEETS
3	S.C.	CHEROKEE	S-226	1	4

INDEX OF SHEETS		
SHEET #	DESCRIPTION	SHEET TOTALS
1	Title Sheet	1
3	Typical Sections	1
6	Plan and Profile Sheets	1
X1	Cross Section Sheet	1
	TOTAL SHEETS	4

South Carolina Department of Transportation

Design Reference for these plans is the:

2022

REQUEST FOR PROPOSALS INSTRUCTIONS
BRIDGE PACKAGE 14

APPROXIMATE PROJECT LOCATION: CHEROKEE COUNTY

CONCEPTUAL PLANS FOR

CHEROKEE COUNTY
PROPOSED S-226 (HAMMETT GROVE RD.) BRIDGE REPLACEMENT OVER UNNAMED CREEK
CONTRACT ID: 1162220

NPDES PERMIT INFORMATION

Disturbed Area = TBD Acre(s)

Permitted Area = TBD

Approximate Location of Roadway is

Begin
Latitude 34°56'08"N
Longitude 81°44'57"W

End
Latitude 34°56'12"N
Longitude 81°44'53"W

Hydraulic and NPDES Design provided by:

Davis & Floyd, Inc.

3 DAYS BEFORE DIGGING IN SOUTH CAROLINA

CALL 811

SOUTH CAROLINA 811 (SC811)
WWW.SC811.COM
ALL UTILITIES MAY NOT BE A MEMBER OF SC811.

CONSTRUCTION LIMITS S-226
STA. 159+00.00 TO STA. 164+50.00

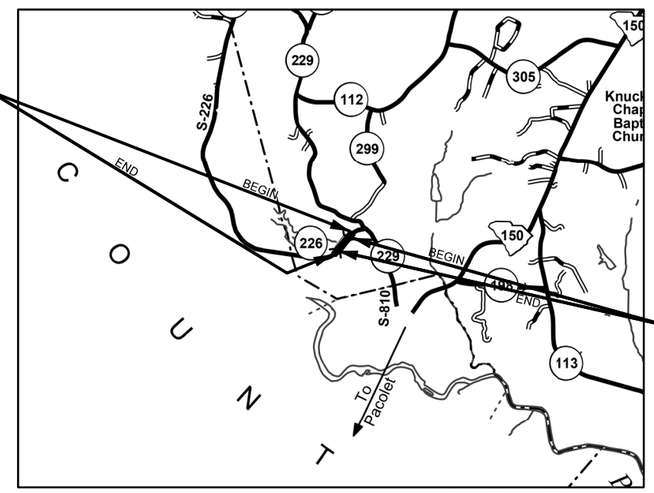

BRIDGE LIMITS FOR S-226
STA. 161+97.75 TO STA. 162+77.75
NOTE: BRIDGE PLANS BOUND UNDER SEPARATE COVER

LAYOUT
SCALE = N.T.S.

CHEROKEE COUNTY

240 STONERIDGE DRIVE, SUITE 306
COLUMBIA, SC 29210
(803) 256-4121

DAVIS & FLOYD
SINCE 1954

	S-226	TOTAL	
NET LENGTH OF ROADWAY	0.089	0.089	MILES
NET LENGTH OF BRIDGES	0.015	0.015	MILES
NET LENGTH OF PROJECT	0.104	0.104	MILES
LENGTH OF EXCEPTIONS	0.000	0.000	MILES
GROSS LENGTH OF PROJECT	0.104	0.104	MILES

EQUALITIES IN STATIONING
N/A

NOTE: EXCEPT AS MAY OTHERWISE BE SPECIFIED ON THE PLANS OR IN THE SPECIAL PROVISIONS, ALL MATERIALS AND WORKMANSHIP ON THIS PROJECT SHALL CONFORM TO THE SOUTH CAROLINA DEPARTMENT OF TRANSPORTATION STANDARD SPECIFICATIONS FOR HIGHWAY CONSTRUCTION (2007 EDITION) AND THE STANDARD DRAWINGS FOR ROAD CONSTRUCTION IN EFFECT AT THE TIME OF LETTING.

TRAFFIC DATA

2020 ADT 200

2040 ADT 256

TRUCKS 5 %

RAILROAD INVOLVEMENT?
YES / NO

CONSULTING ENGINEERING FIRM

SOUTH CAROLINA
DAVIS & FLOYD INC.
ENGINEERING
NO. C00538
CERTIFICATE OF AUTHORIZATION

ENGINEER OF RECORD

FOR CONSTRUCTION : _____ _____
DATE

SCALE: 5200.0000 ft / in.
PEN TABLE: 14034-00 Plan-PDF_HALF.tbl
PLOT DRIVER: PDF.pltcfg
FILE: J:\Jobseven\14034-00\Production\Transportation\S-226 over UNNAMED STREAM 02006\SHEETS\001_14034-00 S226 TITLE SHEET.DGN
10/21/2022

TYPICAL SECTION OF IMPROVEMENT
CHEROKEE COUNTY

CONCEPTUAL PLANS

FED. ROAD DIV.NO.	STATE	COUNTY	CONTRACT ID	ROUTE NO.	SHEET NO.	TOTAL SHEETS
3	S.C.	CHEROKEE	1162220	S-226	3	

NOTES:

1. WHERE NEW HOT MIX ASPHALT (HMA) PAVEMENT TIES IN WITH EXISTING PAVEMENT AT THE PROJECT TERMINI, VARIABLE MILL AS NECESSARY TO PROVIDE A SMOOTH TRANSITION BETWEEN EXISTING AND NEW HMA SURFACE. IF PROFILE DIFFERENTIAL BETWEEN NEW AND EXISTING DOES NOT ALLOW FOR A BUTT JOINT, TIE IN WITH HMA SURFACE OVER A MINIMUM LENGTH OF 100 FEET. TIE DOWN DRIVEWAYS WITH HMA MATCHING MAINLINE TYPE TO THE BACK OF THE RIGHT OF WAY OR AS DIRECTED BY RCE. TIE DOWN INTERSECTING ROUTES WITH HMA MATCHING MAINLINE TYPE. REMOVE OR OTHERWISE MODIFY EXISTING PAVEMENT IN ACCORDANCE WITH SECTION 205.4.5 OF THE STANDARD SPECIFICATIONS PRIOR TO PLACEMENT OF NEW EMBANKMENT.

2. IN AREAS WHERE EXISTING PAVEMENTS ARE WIDENED OUTSIDE THE TRAVEL LANES, USE 400 PSY OF SHOULDER WIDENING MATERIAL AND OVERLAY WITH SURFACE COURSE AT THE RATE SPECIFIED FOR THAT ROAD. WHERE LEVELING, BUILD-UP OR CROSS SLOPE CORRECTION IS REQUIRED, USE HMA SURFACE TYPE E FOR 0 TO 1.5 INCHES. USE INTERMEDIATE C OR SURFACE TYPE C FOR ANYTHING GREATER THAN 1.5 INCHES. PROVIDE FULL DEPTH ASPHALT PAVEMENT PATCHING AS DIRECTED PER EXHIBIT 5. PATCHING QUANTITY IN EXHIBIT 5 INCLUDES BRIDGE APPROACHES AND DETOUR ROUTES. PLACEMENT AND SELECTION OF MIXES SHALL BE IN ACCORDANCE WITH ASPHALT MIX DESIGN GUIDELINES FOUND HERE: HTTP://WWW.SCDOT.ORG/BUSINESS/PDF/MATERIALS-RESEARCH/GUIDELINES_ASPHALT_MIX_SELECTION.PDF

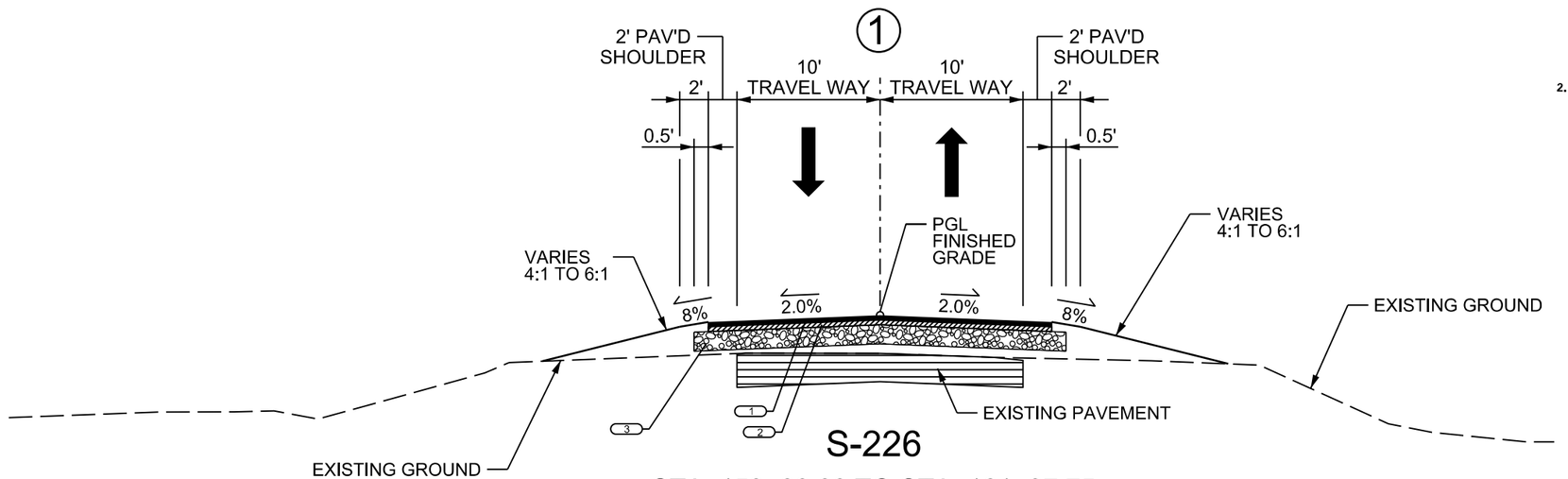

S-226

STA. 159+00.00 TO STA. 161+97.75
STA. 162+77.75 TO STA. 164+50.00

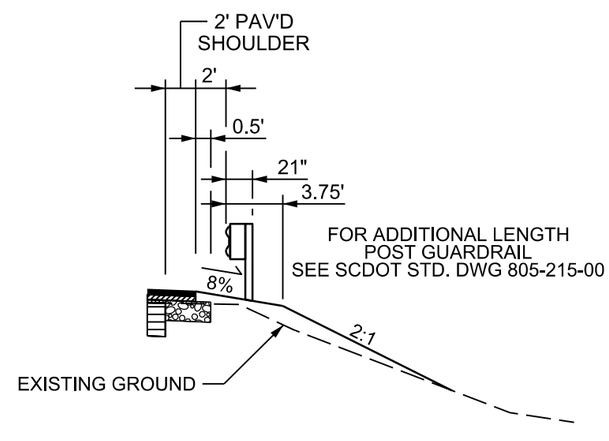

GUARDRAIL DETAIL

FUNCTIONAL CLASSIFICATION:
S-226 - RURAL LOCAL GROUP 4

1 HMA SURFACE COURSE TYPE C OR TYPE D (150 LB/SY)
2 HMA SURFACE COURSE TYPE C OR D (175 LB/SY) OR HMA INTERMEDIATE COURSE TYPE B OR C (200 LB/SY)
3 10" GABC

RTE. S-226 35 MPH

MPH	FROM STA.	TO STA.
35	159+00.00	164+50.00

SOUTH CAROLINA DAVIS & FLOYD, INC. No. C00538 CERTIFICATE OF AUTHORIZATION

DAVIS & FLOYD
SINCE 1954
240 STONERIDGE DRIVE, SUITE 305
COLUMBIA, SC 29210
(803) 256-4121

REV. NO.	BY	DATE	DESCRIPTION OF REVISION
5			
4			
3			
2			
1			

DESIGNED BY ____ DRAWN BY ____ CHECKED BY ____

SOUTH CAROLINA
DEPARTMENT OF TRANSPORTATION
ROAD DESIGN COLUMBIA, S.C.

DB 14 BRIDGE PLANS
PLAN & PROFILE SHEET
S-226 (HAMMETT GROVE RD.)

SCALE 1"= 50' HOR. 1" = 10' VER. PLOT SIZE = 22" x 34"

SCALE: 100.0000 ft / in.
PEN TABLE: 14034-00 Plan-PDF_HALF.tbl
PLOT DRIVER: PDF.pltcfg
FILE: J:\JobsEven\14034-00\Production\Transportation\S-226 over UNNAMED STREAM 02006\SHEETS\003_14034-00 S226_TYPICAL SHEETS.DGN
10/21/2022

CONCEPTUAL PLANS

FED. ROAD DIV.NO.	STATE	COUNTY	CONTRACT ID	ROUTE NO.	SHEET NO.	TOTAL SHEETS
3	S.C.	CHEROKEE	1162220	S-226	6	

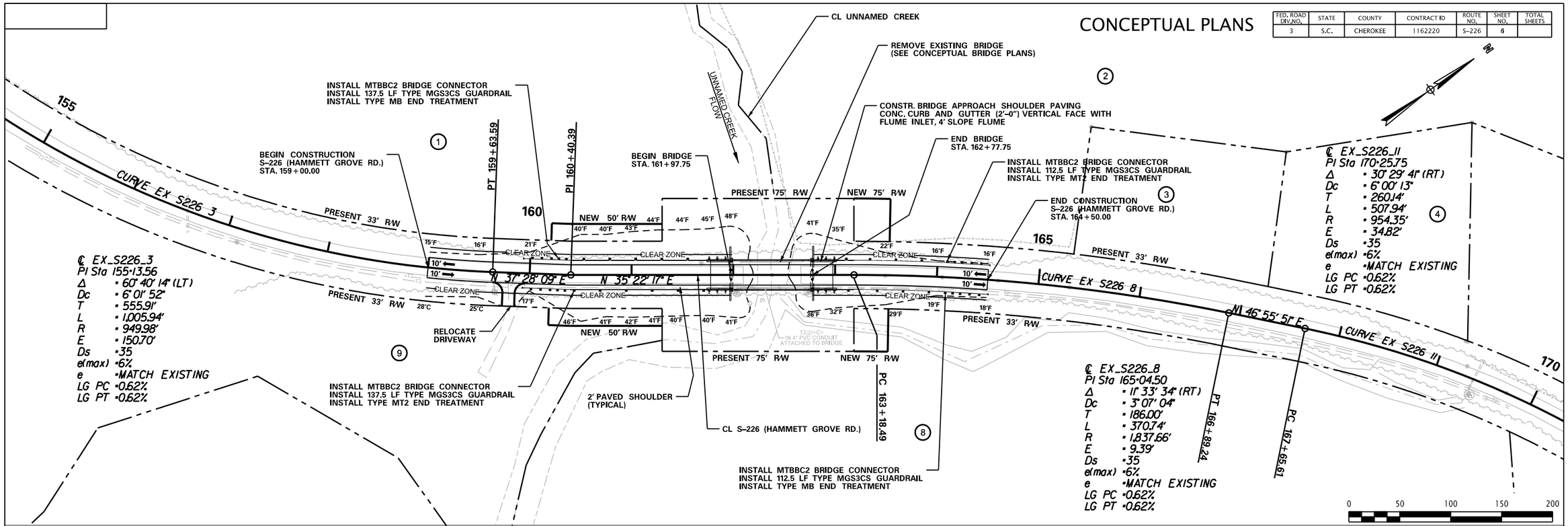

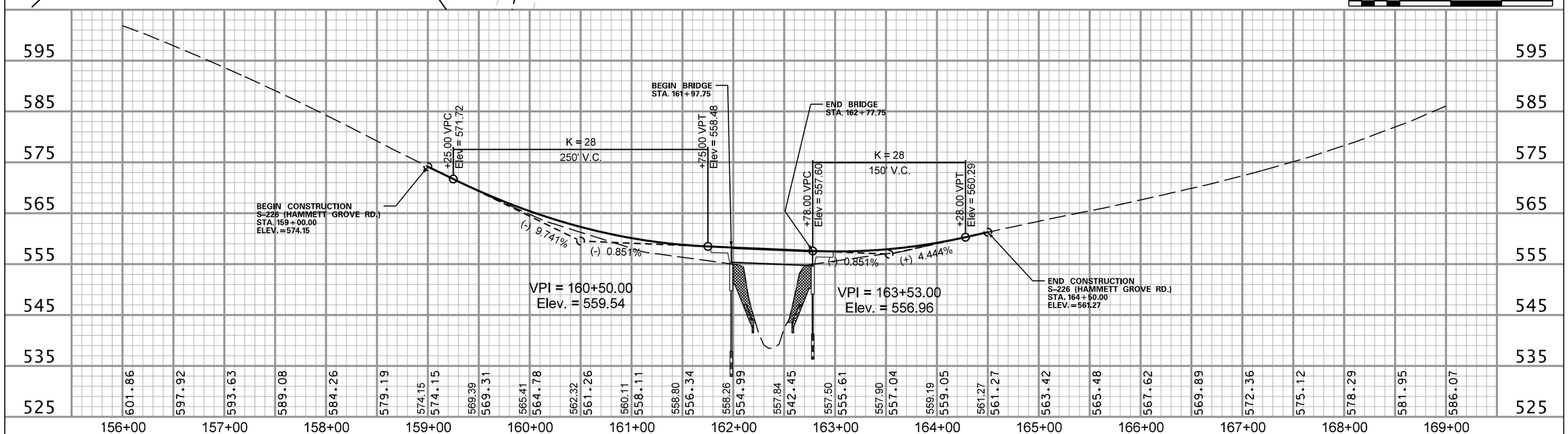

SCALE: 100.0000 ft / in.
PEN TABLE: 14034-00 Plan-PDF_HALF.tbl
PLOT DRIVER: PDF.pltcfg
FILE: J:\JobsEven\14034-00\Production\Transportation\S-226 over UNNAMED STREAM 02006\SHEETS\006_14034-00 S226_PLAN SHEETS.DGN
10/21/2022

SOUTH CAROLINA DAVIS & FLOYD, INC. No. C00538 CERTIFICATE OF AUTHORIZATION

DAVIS & FLOYD
SINCE 1954

240 STONERIDGE DRIVE, SUITE 305
COLUMBIA, SC 29210
(803) 256-4121

REV. NO.	BY	DATE	DESCRIPTION OF REVISION
5			
4			
3			
2			
1			

DESIGNED BY ____ DRAWN BY ____ CHECKED BY ____

SOUTH CAROLINA
DEPARTMENT OF TRANSPORTATION
ROAD DESIGN COLUMBIA, S.C.

DB 14 BRIDGE PLANS
PLAN & PROFILE SHEET
S-226 (HAMMETT GROVE RD.)

SCALE 1" = 50' HOR. 1" = 10' VER. PLOT SIZE = 22" x 34"

CONCEPTUAL PLANS

STATE	COUNTY	CONTRACT ID	ROAD NAME	SHEET NO.	TOTAL SHEETS
S.C.	CHEROKEE	1162220	S-226	X1	

NOTE:
STEEPEND SLOPES AS APPROVED BY ATC #1

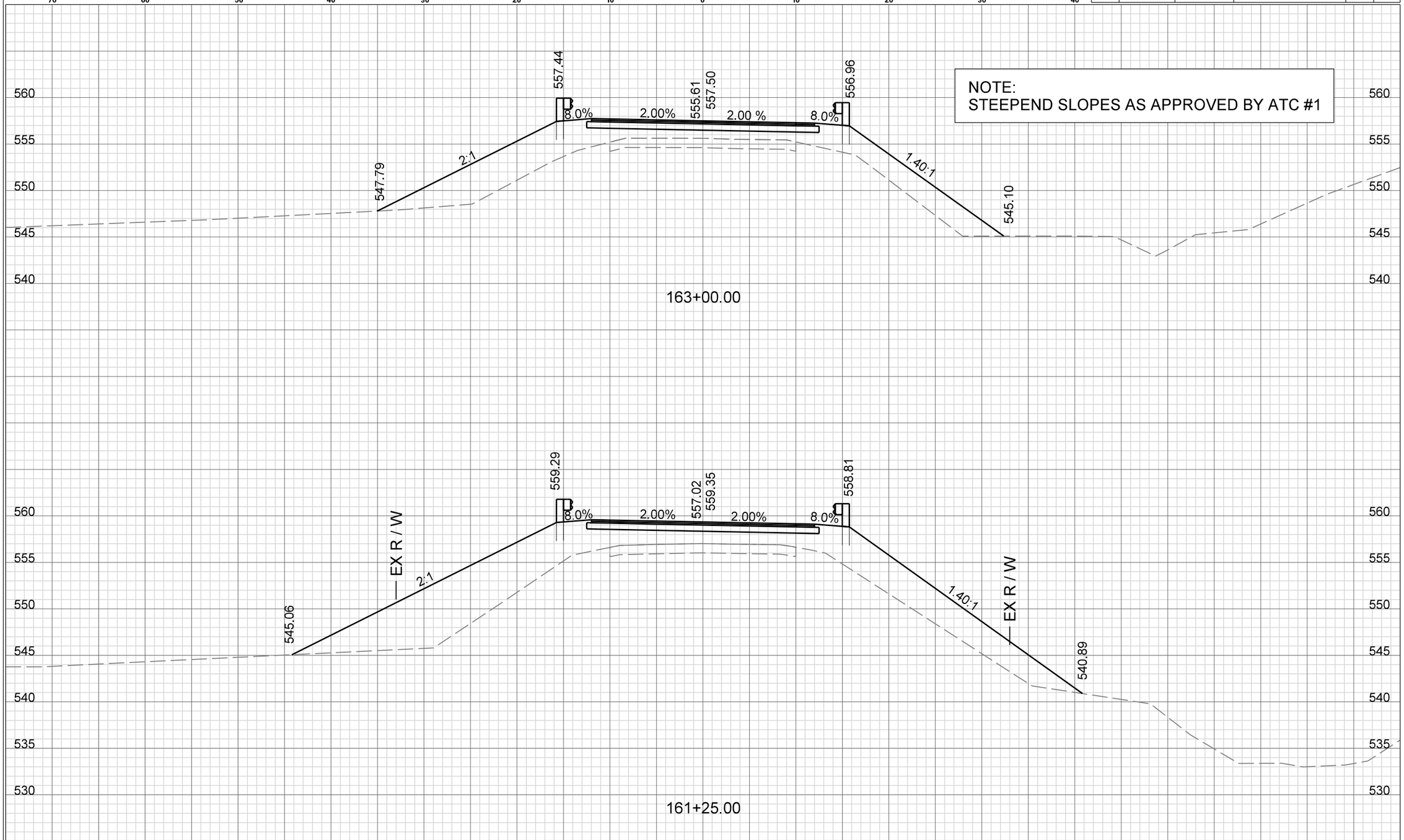

REV. NO.	BY	DATE	DESCRIPTION OF REVISION
4			
3			
2			
1			

DGN. _____ DATE _____
R/W _____ DATE _____
CHK. _____ DATE _____

SOUTH CAROLINA
DAVIS & FLOYD, INC.
No. C005338
CERTIFICATE OF AUTHORIZATION

S-226
STA. 161+25.00
TO
STA. 163+00.00
SCALE: 1"=5' HOR. 1"=5' VERT.

SCALE: 10.0958 ft / in.
PEN TABLE: J:\JobsEven\14034-00\Production\Transportation\SCDOT Levels 2015 X Sections.tbl
PLOT DRIVER: G:\Resource\Standards\Bentley\Transportation\DF STANDARDS\MSfiles\plotting\PDF.pltcfg
FILE: J:\JobsEven\14034-00\Production\Transportation\S-226 over UNNAMED STREAM 02006\CROSS SECTIONS\Cross Section Sheets\14034-00_S226 XSC EXHIBIT.dgn
10/21/2022

Appendix A.2

Bridge Plans

S-11-138 over Goucher Creek

BRIDGE PLANS ID	SHEET NO.
P041148-BO1	1

INDEX OF SHEETS

1. TITLE SHEET
2. BRIDGE PLAN & PROFILE
3. END BENT PLAN & ELEVATION
4. TYPICAL SUPERSTRUCTURE SECTION

SCDOT

South Carolina Department of Transportation

PROPOSED PLANS FOR CHEROKEE COUNTY PROJECT ID P041148 S-56 (MONTGOMERY DRIVE) REPLACE BRIDGE OVER HORSE CREEK

Design Reference for these plans is the:

LVB

Supplemental Design Criteria For
Low Volume Bridge Replacement Projects

Submit Shop Plans to:

Davis & Floyd, Inc.
1319 Highway 72/221E
Greenwood, SC 29649

Telephone: (864) 229-5211

Approximate Location of Bridge is

Latitude	35° 10' - 33" N
Longitude	81° 51' - 55" W

SITE LOCATION

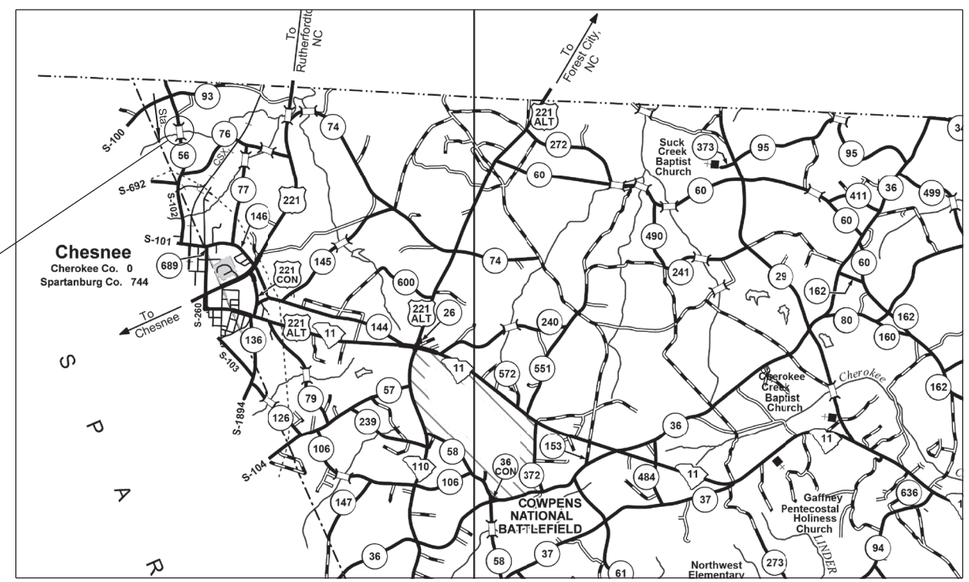

-N-

LAYOUT
(NOT TO SCALE)

SCDOT REVIEW	FOR CONSTRUCTION INITIAL	FOR CONSTRUCTION DATE
PRECONSTRUCTION SUPPORT - ROAD		
PRECONSTRUCTION SUPPORT - STRUCTURES		
RPG - DESIGN MANAGER		
RPG - PROGRAM MANAGER		

THE INITIALS ABOVE DO NOT RELIEVE THE ENGINEER OF RECORD OF THE RESPONSIBILITY TO DESIGN THIS PROJECT IN ACCORDANCE WITH ALL APPLICABLE CRITERIA.

3 DAYS BEFORE DIGGING IN
SOUTH CAROLINA

CALL 811

SOUTH CAROLINA 811 (SC811)
WWW.SC811.COM
ALL UTILITIES MAY NOT BE A MEMBER OF SC811

ASSET ID TBD

TRAFFIC DATA

2020 ADT 375 V.P.D.

2040 ADT 480 V.P.D.

TRUCKS 5 %

NET LENGTH OF ROADWAY	0.000	MILES
NET LENGTH OF BRIDGES	0.009	MILES
NET LENGTH OF PROJECT	0.009	MILES
LENGTH OF EXCEPTIONS	0.000	MILES
GROSS LENGTH OF PROJECT	0.009	MILES

NOTE: EXCEPT AS MAY OTHERWISE BE SPECIFIED ON THE PLANS OR IN THE SPECIAL PROVISIONS, ALL MATERIALS AND WORKMANSHIP ON THIS PROJECT SHALL CONFORM TO THE SOUTH CAROLINA DEPARTMENT OF TRANSPORTATION STANDARD SPECIFICATIONS FOR HIGHWAY CONSTRUCTION (2007 EDITION) AND THE STANDARD DRAWINGS FOR ROAD CONSTRUCTION IN EFFECT AT THE TIME OF LETTING.

CONSULTING ENGINEERING FIRM

SOUTH CAROLINA
DAVIS & FLOYD, INC.
No. C00538
CERTIFICATE OF AUTHORIZATION

ENGINEER OF RECORD

CONCEPTUAL
PLANS
10/24/22

FOR CONSTRUCTION : _____ _____
DATE

SCALE: 50.0000 ' / in.
PEN TABLE: \\chs-fs1\Data\Resource\Standards\Bentley\Vertical\Plotting\DO_NOTHING_BRIDGES.tbl
PLOT DRIVER: \\CHS-FS1\Data\Resource\Standards\Bentley\Vertical\Plotting\BRIDGES.pdf MS i.pltcfg
FILE: \\col-fs\Data\JobsEven\14034-00\Production\Structural\S-56 BRO Horse Creek\Drawings\14034-00_S-56_BR_01_Title Sheet.dgn
10/20/2022

BRIDGE PLANS ID	SHEET NO.
P041148-B01	2

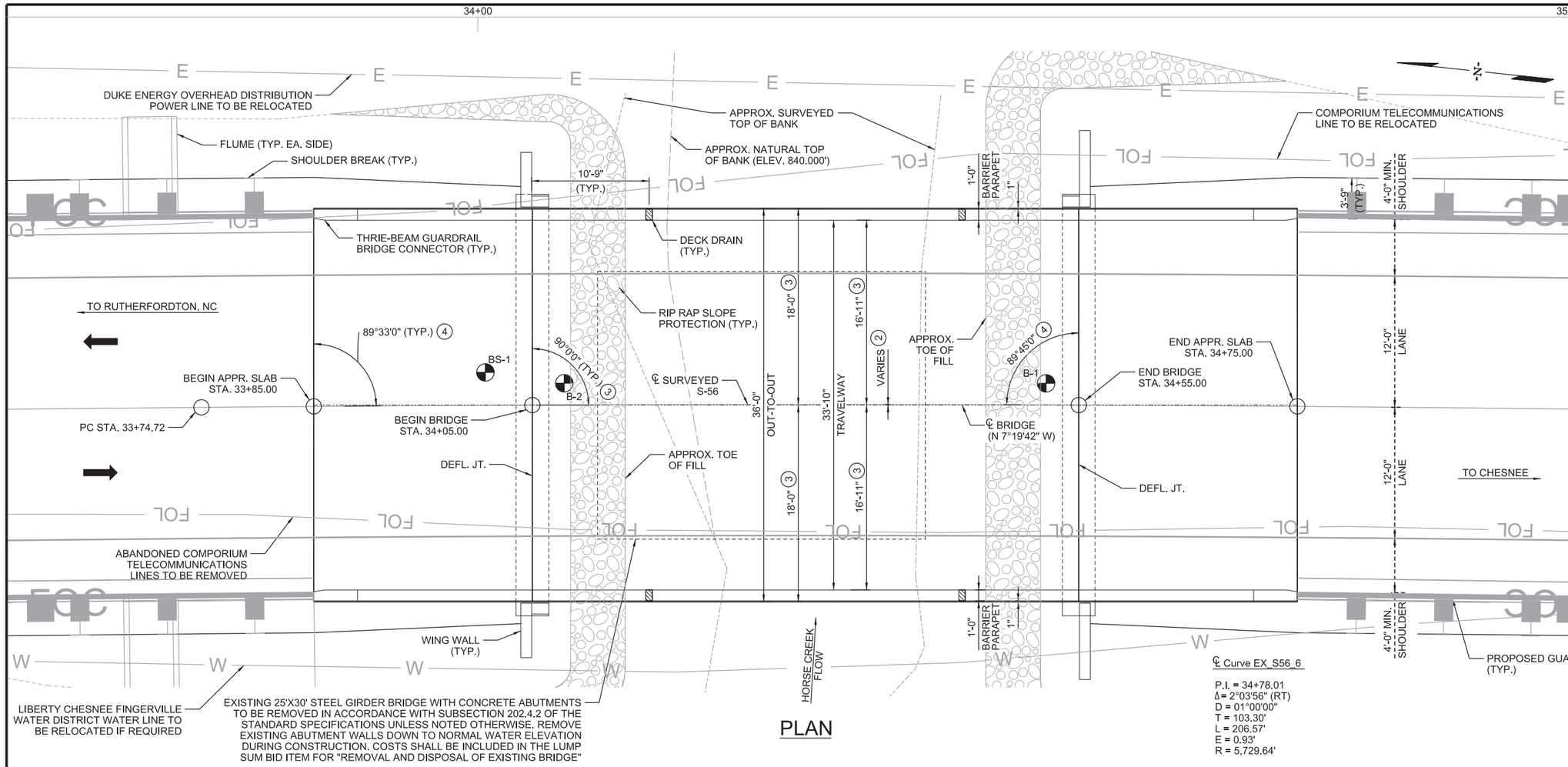

PLAN

CONTROL POINTS

ID: CP5
DESCRIPTION: BRIDGE NL
STATION: 25+64.35
OFFSET: 15.54' LT
NORTHING: 1218202.009'
EASTING: 1741228.439'
ELEVATION: 875.50'

ID: CP6
DESCRIPTION: BRIDGE NL
STATION: 35+70.15
OFFSET: 17.00' RT
NORTHING: 1217201.349'
EASTING: 1741330.766'
ELEVATION: 850.20'

LEGEND

F - DENOTES FIXED BEARING

DIRECTION OF TRAVEL

BORING LOCATION

EXISTING GROUND LINE
EXISTING GROUND LINE 25' LEFT
EXISTING GROUND LINE 25' RIGHT

NOTES:

1. THE WATER ELEVATION SHOWN WAS OBSERVED AT THE TIME OF SURVEY. THE ELEVATION IS FOR INFORMATION ONLY AND THE ACTUAL WATER ELEVATION DURING CONSTRUCTION MAY VARY DEPENDING ON WEATHER CONDITIONS AND SEASONAL FLUCTUATIONS.
2. 0" MIN. AT BEGIN/END BRIDGE ⅝" MAX. AT MIDSPAN
3. MEASURED TO/ALONG ℄ BRIDGE
4. MEASURED TANGENT TO ℄ SURVEYED S-56

EXISTING & PROPOSED R/W BEYOND LIMITS OF SHEET.

EXISTING UTILITIES TO BE RELOCATED PRIOR TO CONSTRUCTION UNLESS NOTED OTHERWISE.

VERTICAL CURVE DATA

(+)0.838% (+)8.762%

VPI = 35+42.00
ELEV. = 847.390
L.C. = 300'

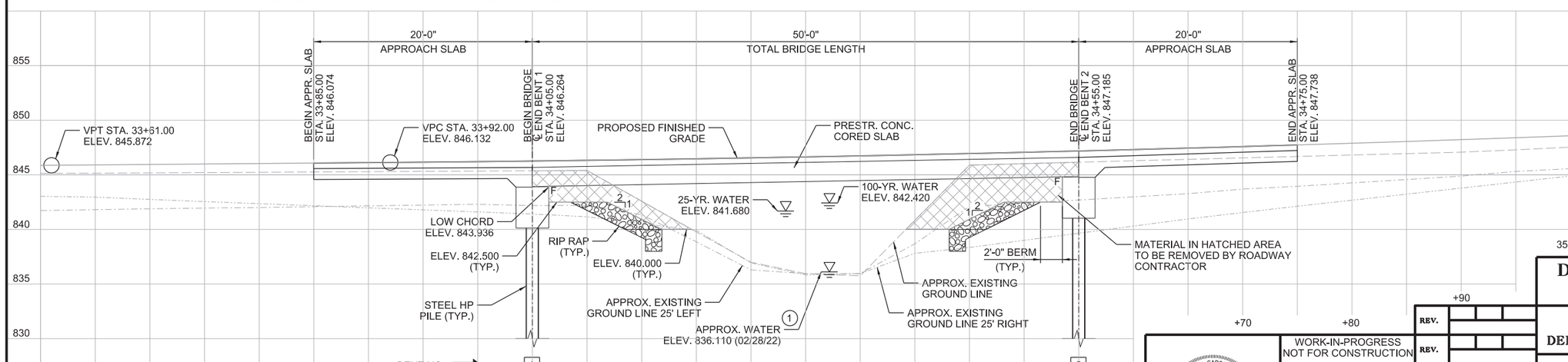

SECTION ALONG ℄ SURVEY

HYDRO DATA

D.A. = 1.0 SQ. MI.
Q_{25}= 526 CFS
$ELEV._{25}$= 841.68' W/ 0.20' OF BACKWATER
$AREA\ FURNISHED_{25}$= 92 SF
$VEL._{25}$= 3.26 FPS
Q_{100}= 755 CFS
$ELEV._{100}$ = 842.42' W/ 0.22' OF BACKWATER
$AREA\ FURNISHED_{100}$ = 111 SF
$VEL._{100}$= 4.12 FPS
OVERTOPPING FLOOD FLOW = N/A
OVERTOPPING FLOOD PROBABILITY = <0.2%

SCALE: 5.333 ft / in.
PEN TABLE: \\chs-fs1\Data\Resource\Standards\Bentley\Vertical\Plotting\DO_NOTHING_BRIDGES.tbl
PLOT DRIVER: \\CHS-FS1\Data\Resource\Standards\Bentley\Vertical\Plotting\BRIDGES.pdf MS1.pltcfg
\\col-fs1\Data\JobsEven\14034-00\Production\Structural\S-56 BRO Horse Creek\Drawings\14034-00_S-56_BR_02_Bridge Plan and Profile.dgn
10/20/2022

DAVIS & FLOYD
SINCE 1954
1319 HWY 72/221 E.
GREENWOOD, SC 29649
(864) 229-5211

SOUTH CAROLINA DEPARTMENT OF TRANSPORTATION

SOUTH CAROLINA DAVIS & FLOYD, INC. No. C00538 CERTIFICATE OF AUTHORIZATION

WORK-IN-PROGRESS NOT FOR CONSTRUCTION

CONCEPTUAL PLANS 10/24/22

REV.			
REV.			
REV.			
REVIEWED	CLM		
QUAN.			
DR.	ZMA	RGS	10-22
DES.	ZMA	RGS	10-22
	BY	CHK.	DATE

BRIDGE PLAN & PROFILE

COUNTY: CHEROKEE
ROUTE: S-56

BRIDGE PLANS ID	SHEET NO.
P041148-B01	3

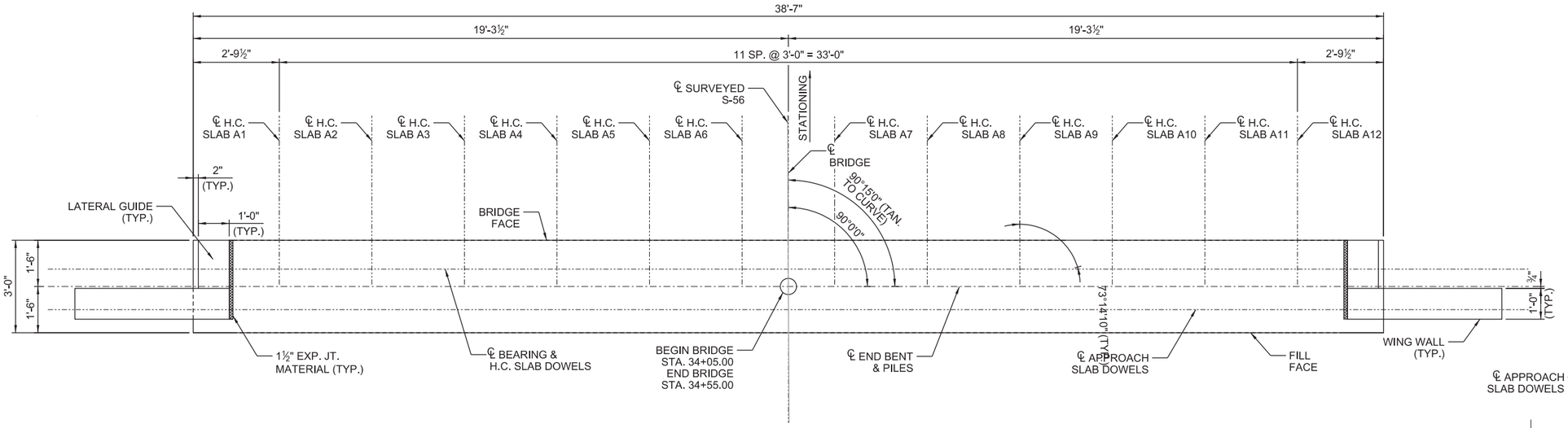

PLAN

(END BENT 1 SHOWN, END BENT 2 SIMILAR)
(PILES NOT SHOWN FOR CLARITY)

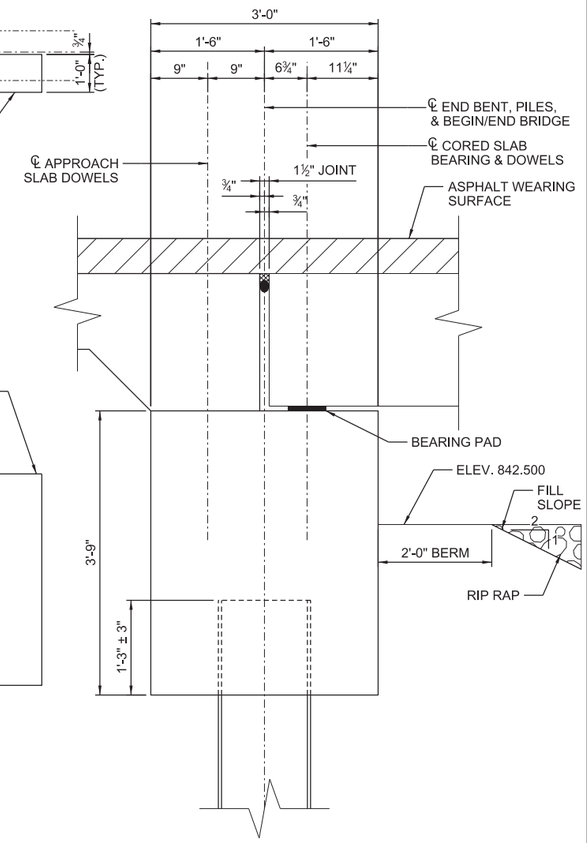

SECTION A-A

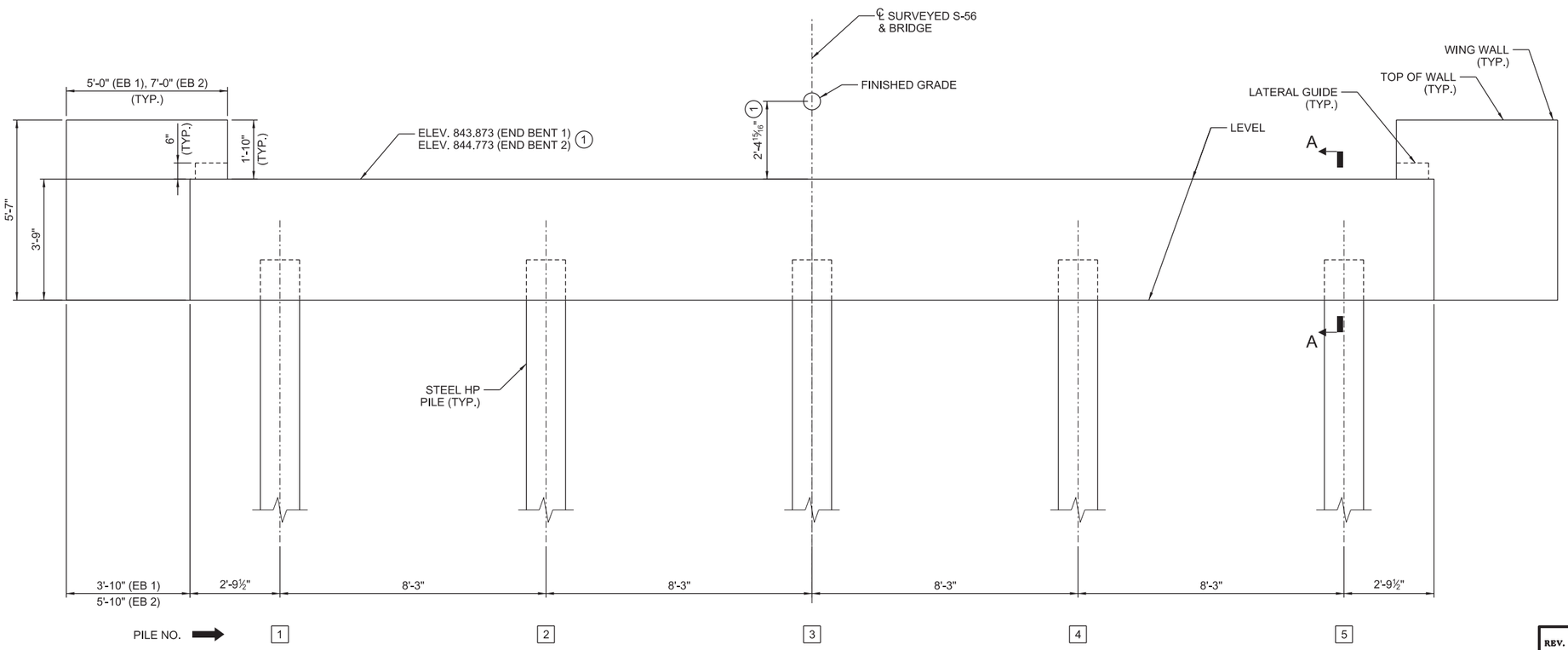

ELEVATION

(END BENT 1 SHOWN, END BENT 2 SIMILAR)
(LOOKING UPSTATION)

(1) DIMENSION/ELEVATION TO BE VERIFIED ONCE FINAL SLAB CAMBERS ARE DETERMINED

SOUTH CAROLINA DAVIS & FLOYD, INC. No. C00538 CERTIFICATE OF AUTHORIZATION

WORK-IN-PROGRESS NOT FOR CONSTRUCTION

CONCEPTUAL PLANS 10/24/22

REV.			
REV.			
REV.			
REVIEWED	CLM		
QUAN.			
DR.	ZMA	RGS	10-22
DES.	ZMA	RGS	10-22
	BY	CHK.	DATE

DAVIS & FLOYD
SINCE 1954
1319 HWY 72/221 E.
GREENWOOD, SC 29649
(864) 229-5211

SOUTH CAROLINA DEPARTMENT OF TRANSPORTATION

END BENT PLAN & ELEVATION

COUNTY: CHEROKEE

ROUTE: S-56

SCALE: 2.000 ft / in.
PEN TABLE: \\chs-fs1\Data\Resource\Standards\Bentley\Vertical\Plotting\DO_NOTHING_BRIDGES.tbl
PLOT DRIVER: \\CHS-FS1\Data\Resource\Standards\Bentley\Vertical\Plotting\BRIDGES pdf MS1.pltcfg
10/20/2022
\\col-fs\Data\JobsEven\14034-00\Production\Structural\S-56 BRO Horse Creek\Drawings\14034-00_S-56_BR_03_End Bent Plan & Elevation.dgn

BRIDGE PLANS ID	SHEET NO.
P041148-B01	4

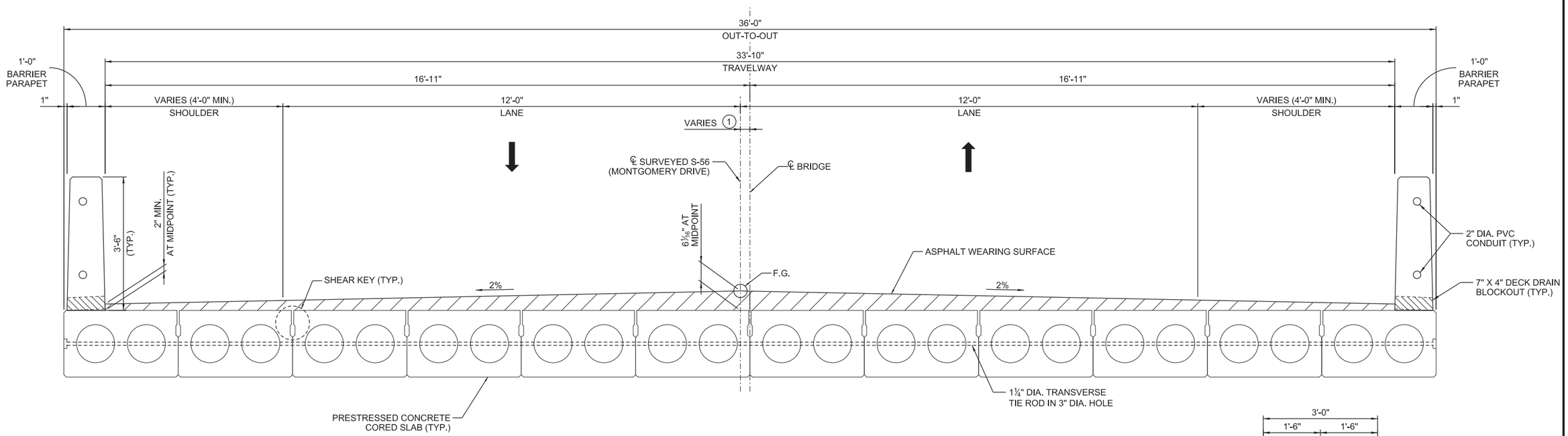

1 0" MIN. AT BEGINNING & END OF BRIDGE.
⅝" MAX. AT MIDSPAN.

TYPICAL SECTION

(LOOKING IN DIRECTION OF STATIONING)

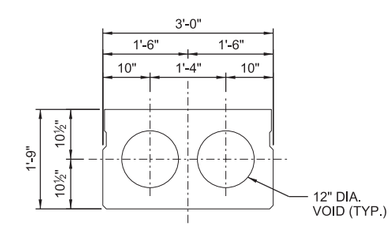

INTERIOR SLAB SECTION - CORED SLAB

SCALE: 1.333 ft / in.
PEN TABLE: \\chs-fs1\Data\Resource\Standards\Bentley\Vertical\Plotting\DO_NOTHING_BRIDGES.tbl
PLOT DRIVER: \\CHS-FS1\Data\Resource\Standards\Bentley\Vertical\Plotting\BRIDGES.pdf MS1.pltcfg
\\col-fs\Data\JobsEven\14034-00\Production\Structural\S-56 BRO Horse Creek\Drawings\14034-00_S-56_BR_04_Typical Superstructure Section.dgn
10/20/2022

SOUTH CAROLINA DAVIS & FLOYD, INC. No. C00538 CERTIFICATE OF AUTHORIZATION

WORK-IN-PROGRESS
NOT FOR CONSTRUCTION

CONCEPTUAL
PLANS
10/24/22

REV.			
REV.			
REV.			
REVIEWED	CLM		
QUAN.			
DR.	ZMA	RGS	10-22
DES.	ZMA	RGS	10-22
	BY	CHK.	DATE

DAVIS & FLOYD
SINCE 1954
1319 HWY 72/221 E.
GREENWOOD, SC 29649
(864) 229-5211

SOUTH CAROLINA DEPARTMENT OF TRANSPORTATION

TYPICAL SUPERSTRUCTURE SECTION

COUNTY: CHEROKEE
ROUTE: S-56

BRIDGE PLANS ID	SHEET NO.
P041152-BO1	1

INDEX OF SHEETS

1. TITLE SHEET
2. BRIDGE PLAN AND PROFILE
3. END BENT PLAN AND ELEVATION
4. INTERIOR BENT PLAN AND ELEVATION
5. TYPICAL SUPERSTRUCTURE SECTIONS

SCDOT

South Carolina Department of Transportation

PROPOSED PLANS FOR CHEROKEE COUNTY PROJECT ID P041152 S-86 (ROCK HOUSE ROAD) REPLACE BRIDGE OVER KINGS CREEK

Design Reference for these plans is the:

LVB

Supplemental Design Criteria For
Low Volume Bridge Replacement Projects

Submit Shop Plans to:

Davis & Floyd, Inc.
1319 Highway 72/221E
Greenwood, SC 29649

Telephone: (864) 229-5211

Approximate Location of Bridge is

Latitude 35° 08' - 44" N
Longitude 81° 24' - 34" W

SITE LOCATION

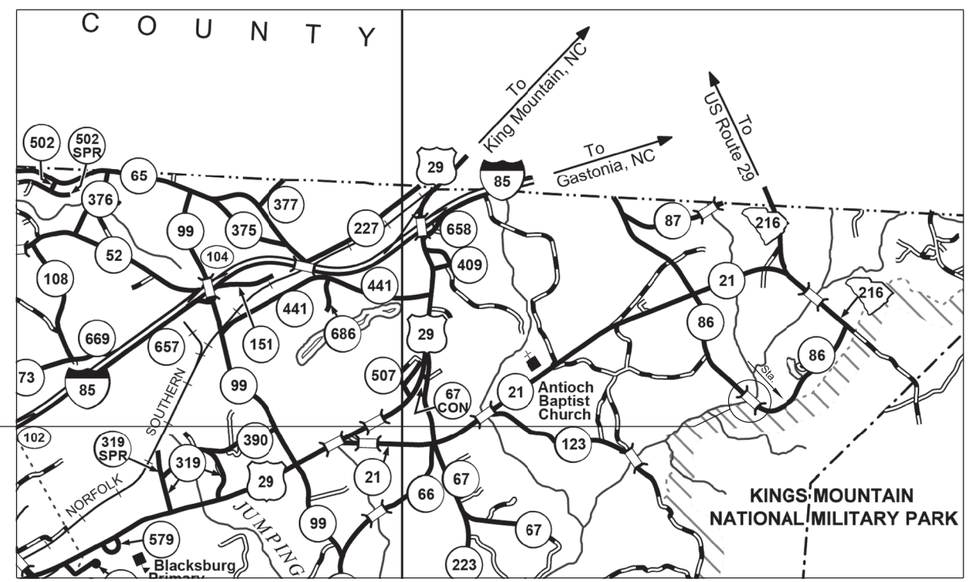

LAYOUT
(NOT TO SCALE)

SCDOT REVIEW	FOR CONSTRUCTION INITIAL	FOR CONSTRUCTION DATE
PRECONSTRUCTION SUPPORT - ROAD		
PRECONSTRUCTION SUPPORT - STRUCTURES		
RPG - DESIGN MANAGER		
RPG - PROGRAM MANAGER		

THE INITIALS ABOVE DO NOT RELIEVE THE ENGINEER OF RECORD OF THE RESPONSIBILITY TO DESIGN THIS PROJECT IN ACCORDANCE WITH ALL APPLICABLE CRITERIA.

3 DAYS BEFORE DIGGING IN
SOUTH CAROLINA

CALL 811

SOUTH CAROLINA 811 (SC811)
WWW.SC811.COM
ALL UTILITIES MAY NOT BE A MEMBER OF SC811

ASSET ID TBD

TRAFFIC DATA

2020 ADT 200 V.P.D.

2040 ADT 256 V.P.D.

TRUCKS 5 %

NET LENGTH OF ROADWAY	0.000	MILES
NET LENGTH OF BRIDGES	0.030	MILES
NET LENGTH OF PROJECT	0.030	MILES
LENGTH OF EXCEPTIONS	0.000	MILES
GROSS LENGTH OF PROJECT	0.030	MILES

NOTE: EXCEPT AS MAY OTHERWISE BE SPECIFIED ON THE PLANS OR IN THE SPECIAL PROVISIONS, ALL MATERIALS AND WORKMANSHIP ON THIS PROJECT SHALL CONFORM TO THE SOUTH CAROLINA DEPARTMENT OF TRANSPORTATION STANDARD SPECIFICATIONS FOR HIGHWAY CONSTRUCTION (2007 EDITION) AND THE STANDARD DRAWINGS FOR ROAD CONSTRUCTION IN EFFECT AT THE TIME OF LETTING.

CONSULTING ENGINEERING FIRM

SOUTH CAROLINA DAVIS & FLOYD, INC. No. C00538 CERTIFICATE OF AUTHORIZATION

ENGINEER OF RECORD

CONCEPTUAL
PLANS
10/24/22

FOR CONSTRUCTION : _____ _____ DATE

SCALE: 50.000 ft / in.
PEN TABLE: G:\Resource\Standards\Bentley\Vertical\Plotting\DO_NOTHING_BRIDGES.tbl
PLOT DRIVER: \\CHS-FS1\Data\Resource\Standards\Bentley\Vertical\Plotting\BRIDGES.pdf MS i.pltcfg
FILE: J:\JobsEven\14034-00\Production\Structural\S-86 BRO Kings Creek\Drawings\014034-00_S-86_BR_01_Title Sheet.dgn
10/20/2022

BRIDGE PLANS ID	SHEET NO.
P041152-B01	2

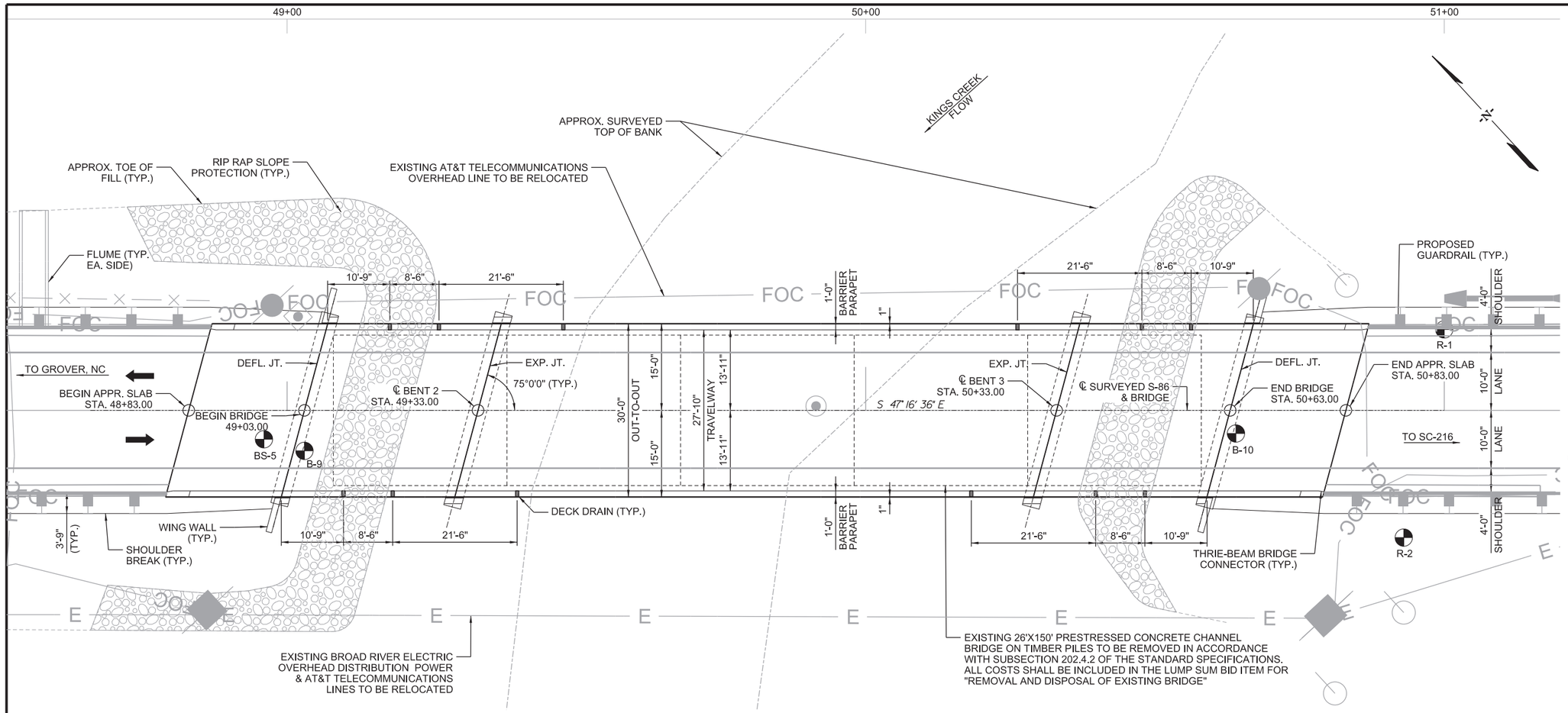

PLAN

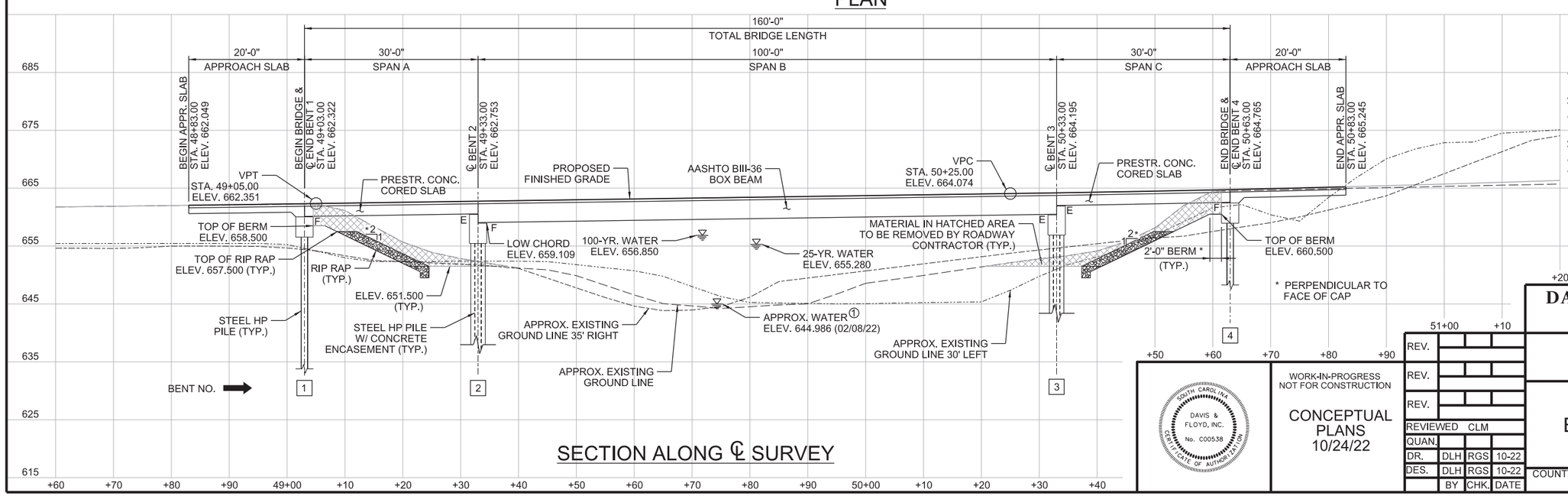

SECTION ALONG ℄ SURVEY

CONTROL POINTS

ID: CP3
DESCRIPTION: 8" NAIL
STATION: 49+01.89
OFFSET: 16.21' LT
NORTHING: 1205528.3200'
EASTING: 1877576.8800'
ELEVATION: 661.63'

ID: CP4
DESCRIPTION: 8" NAIL
STATION: 55+06.35
OFFSET: 11.94' RT
NORTHING: 1205127.1980'
EASTING: 1878028.6290'
ELEVATION: 693.82'

LEGEND

F - DENOTES FIXED BEARING
E - DENOTES EXPANSION BEARING

DIRECTION OF TRAVEL
BORING LOCATION
EXISTING GROUND LINE
EXISTING GROUND LINE 30' LEFT
EXSITING GROUND LINE 35' RIGHT

NOTES:

① THE WATER ELEVATION SHOWN WAS OBSERVED AT THE TIME OF SURVEY. THE ELEVATION IS FOR INFORMATION ONLY AND THE ACTUAL WATER ELEVATION DURING CONSTRUCTION MAY VARY DEPENDING ON WEATHER CONDITIONS AND SEASONAL FLUCTUATIONS.

EXISTING & PROPOSED R/W BEYOND LIMITS OF SHEET.

EXISTING UTILITIES TO BE RELOCATED PRIOR TO CONSTRUCTION UNLESS NOTED OTHERWISE.

EXISTING DUKE ENERGY OVERHEAD TRANSMISSION POWER LINE APPROX. 66' RIGHT OF SURVEYED ℄ S-86 TO REMAIN.

VERTICAL CURVE DATA

(+)0.397% (+)1.436%
VPI = 48+20.00
ELEV. = 661.130
L.C. = 170'

(+)1.436% (+)8.870%
VPI = 52+10.00
ELEV. = 666.730
L.C. = 370'

HYDRO DATA

D.A. = 19.9 SQ. MI.
Q_{25}= 3,503 CFS
$ELEV._{25}$= 655.28' W/ 0.12' OF BACKWATER
$AREA\ FURNISHED_{25}$= 717 SF
$VEL._{25}$= 7.56 FPS
Q_{100} = 4,810 CFS
$ELEV._{100}$ = 656.85' W/ 0.43' OF BACKWATER
$AREA\ FURNISHED_{100}$ = 914 SF
$VEL._{100}$ = 8.19 FPS
OVERTOPPING FLOOD FLOW = N/A
OVERTOPPING FLOOD PROBABILITY = <0.2%

DAVIS & FLOYD
SINCE 1954
1319 HWY 72/221 E.
GREENWOOD, SC 29649
(864) 229-5211

SOUTH CAROLINA DEPARTMENT OF TRANSPORTATION

SOUTH CAROLINA DAVIS & FLOYD, INC. No. C00538 CERTIFICATE OF AUTHORIZATION

WORK-IN-PROGRESS NOT FOR CONSTRUCTION

CONCEPTUAL PLANS 10/24/22

REV.			
REV.			
REV.			
REVIEWED	CLM		
QUAN.			
DR.	DLH	RGS	10-22
DES.	DLH	RGS	10-22
	BY	CHK.	DATE

BRIDGE PLAN & PROFILE

COUNTY: CHEROKEE
ROUTE: S-86

SCALE: 10.000 ft / in.
PEN TABLE: G:\Resource\Standards\Bentley\Vertical\Plotting\DO_NOTHING_BRIDGES.tbl
PLOT DRIVER: \\chs-fs1\Data\Resource\Standards\Bentley\Vertical\Plotting\BRIDGES.pdf MS I.pltcfg
FILE: \\col-fs\Data\JobsEven\14034-00\Production\Structural\S-86 BRO Kings Creek\Drawings\014034-00_S-86_BR_02_Plan & Profile.dgn
10/21/2022

BRIDGE PLANS ID	SHEET NO.
P041152-B01	3

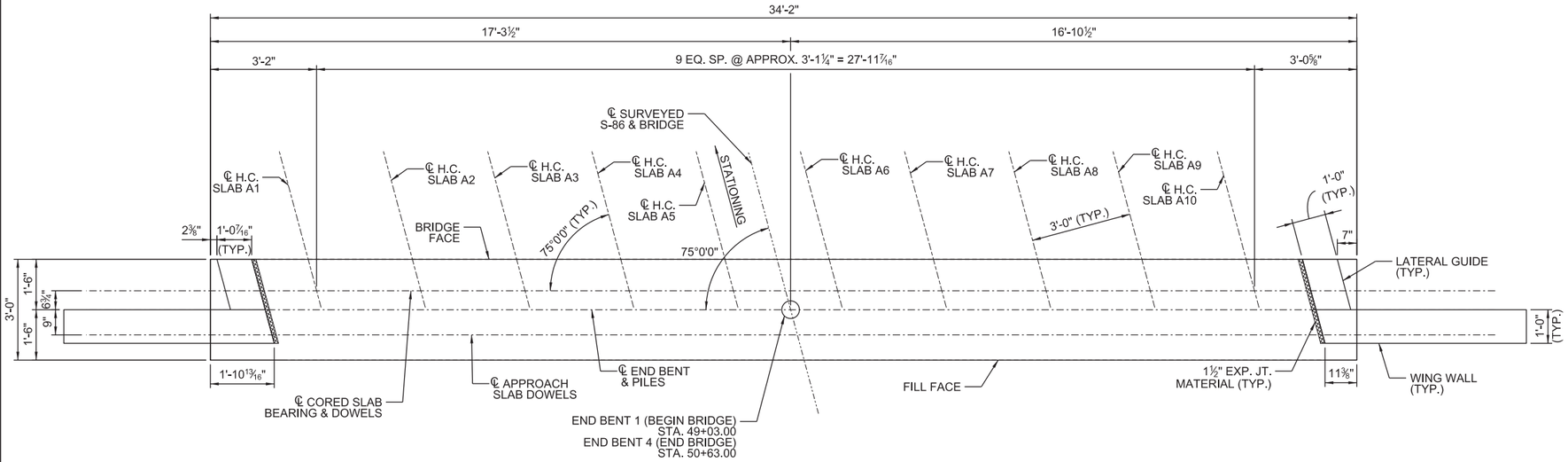

PLAN

(END BENT 1 SHOWN, END BENT 4 SIMILAR)
(PILES NOT SHOWN FOR CLARITY)

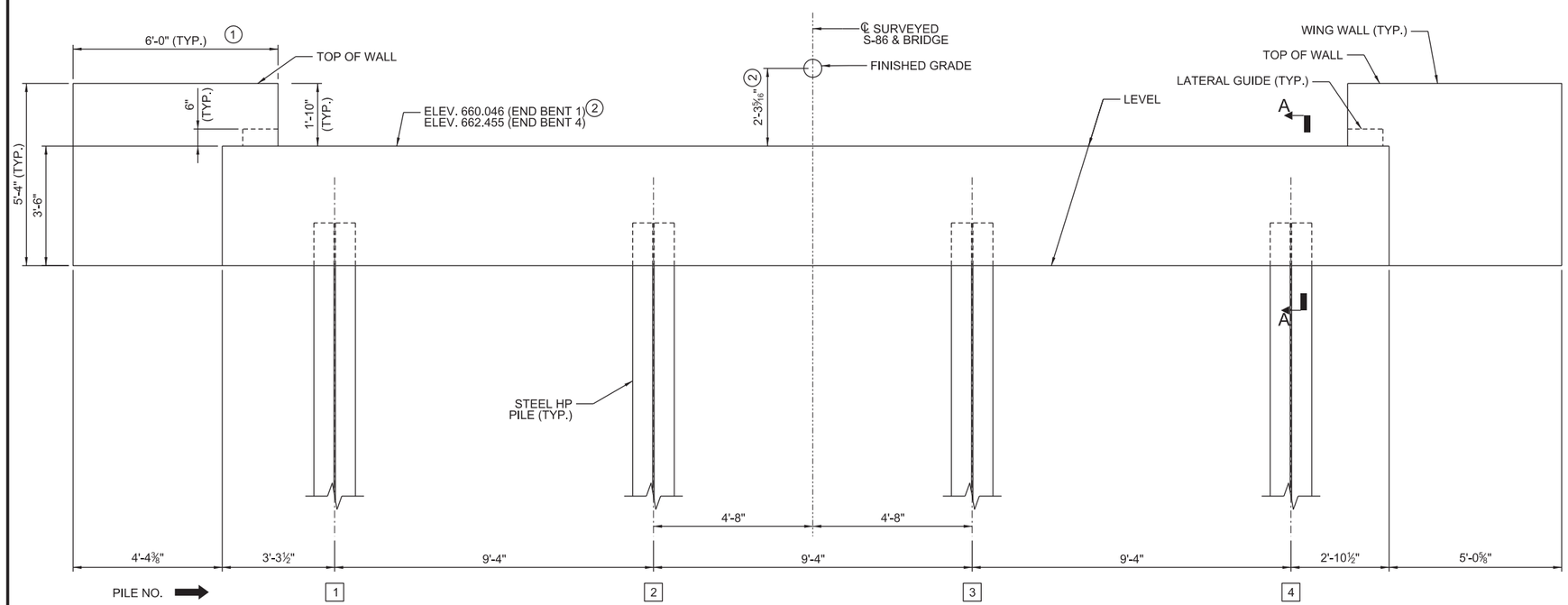

ELEVATION

(END BENT 1 SHOWN, END BENT 4 SIMILAR)
(LOOKING UPSTATION)

① MEASURED ALONG ℄ OF END BENT

② DIMENSION/ELEVATION TO BE VERIFIED ONCE FINAL SLAB CAMBERS ARE DETERMINED

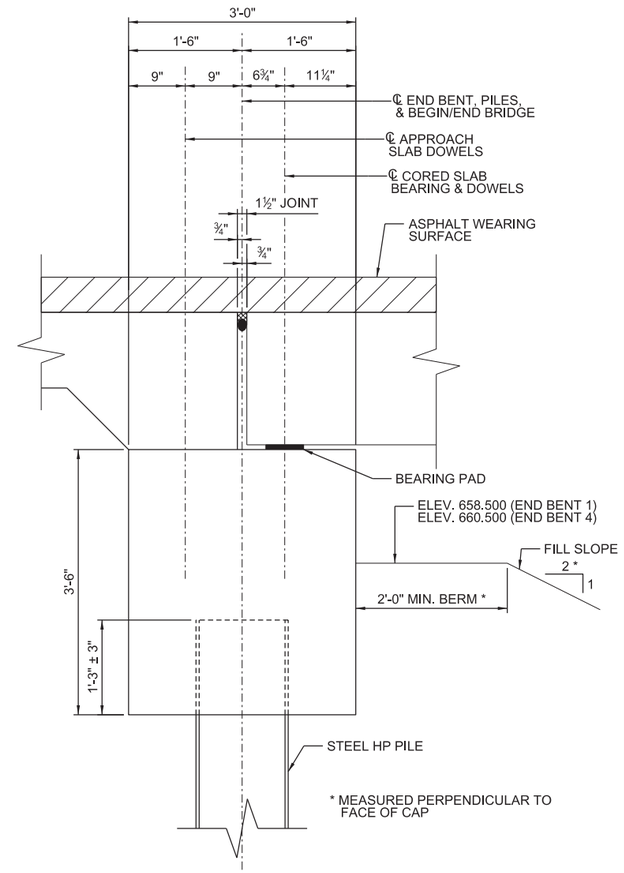

SECTION A-A

SCALE: 2.000 ft / in.
PEN TABLE: G:\Resource\Standards\Bentley\Vertical\Plotting\DO_NOTHING_BRIDGES.tbl
PLOT DRIVER: \\CHS-FS1\Data\Resource\Standards\Bentley\Vertical\Plotting\BRIDGES pdf MS 1.pltcfg
FILE: J:\JobsEven\14034-00\Production\Structural\S-86 BRO Kings Creek\Drawings\014034-00_S-86_BR_03_End Bent Plan & Elevation.dgn
10/20/2022

SOUTH CAROLINA DAVIS & FLOYD, INC. No. C00538 CERTIFICATE OF AUTHORIZATION

WORK-IN-PROGRESS NOT FOR CONSTRUCTION

CONCEPTUAL PLANS 10/24/22

REV.			
REV.			
REV.			
REVIEWED	CLM		
QUAN.			
DR.	DLH	RGS	10-22
DES.	DLH	RGS	10-22
	BY	CHK.	DATE

DAVIS & FLOYD
SINCE 1954
1319 HWY 72/221 E.
GREENWOOD, SC 29649
(864) 229-5211

SOUTH CAROLINA DEPARTMENT OF TRANSPORTATION

END BENT PLAN & ELEVATION

COUNTY	ROUTE
CHEROKEE	S-86

BRIDGE PLANS ID	SHEET NO.
P041152-B01	4

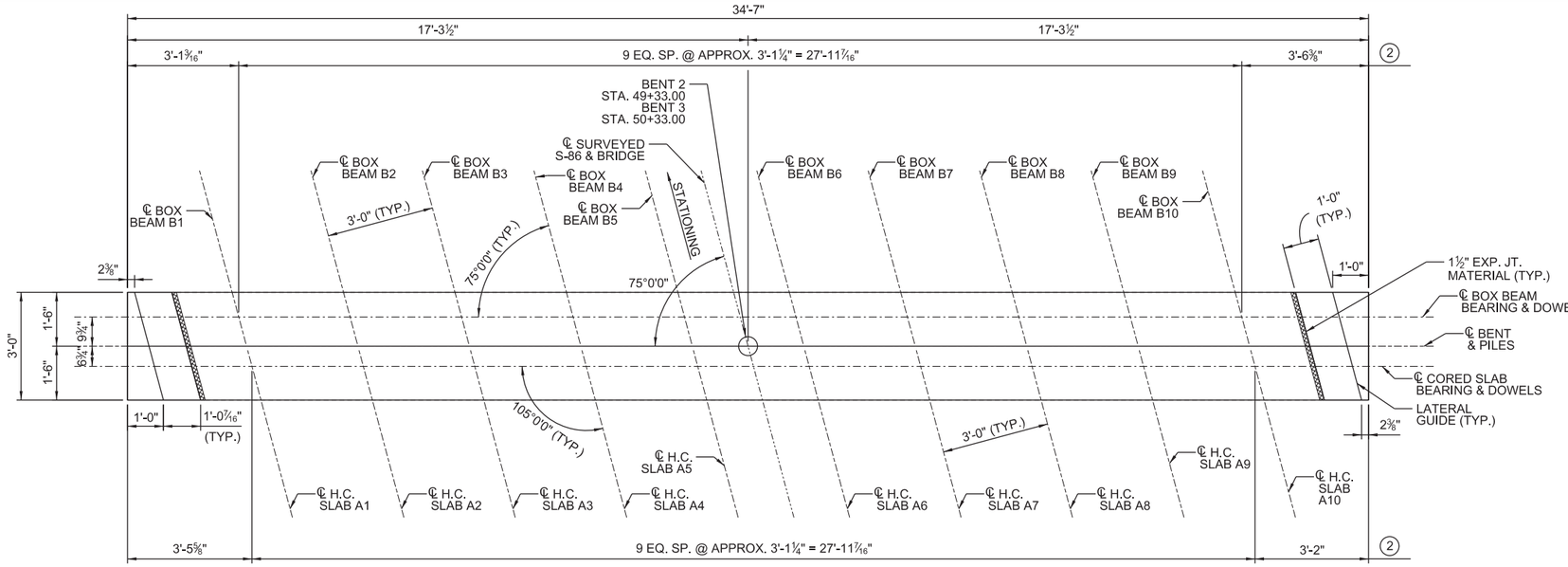

PLAN

(BENT 2 SHOWN, BENT 3 SIMILAR)
(PILES NOT SHOWN FOR CLARITY)

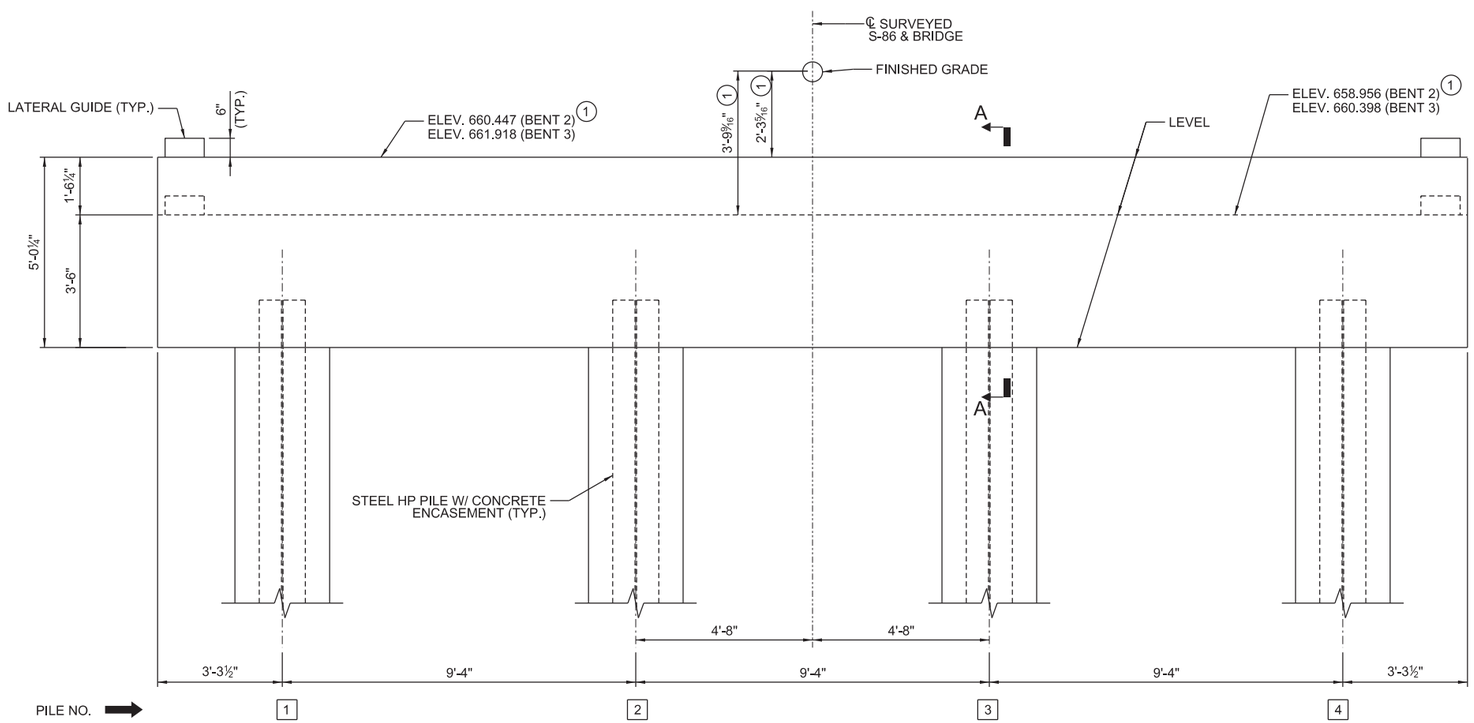

ELEVATION

(BENT 2 SHOWN, BENT 3 SIMILAR)
(LOOKING UPSATION)

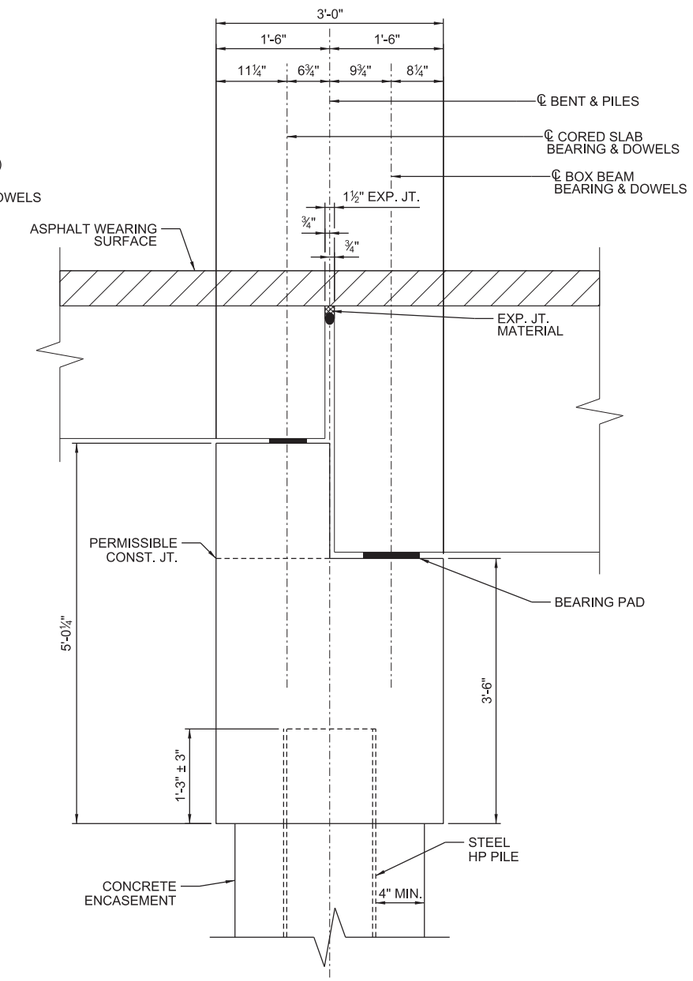

SECTION A-A

1. DIMENSION/ELEVATION TO BE VERIFIED ONCE FINAL SLAB CAMBERS ARE DETERMINED
2. DIMENSIONS DO NOT SUM TO CAP LENGTH DUE TO ROUNDING OF INDIVIDUAL DIMENSIONS TO THE NEAREST ¹⁄₁₆"

SCALE: 2.000 ft / in.
PEN TABLE: G:\Resource\Standards\Bentley\Vertical\Plotting\DO_NOTHING_BRIDGES.tbl
PLOT DRIVER: \\CHS-FS1\Data\Resource\Standards\Bentley\Vertical\Plotting\BRIDGES.pdf MS i.pltcfg
FILE: J:\JobsEven\14034-00\Production\Structural\S-86 BRO Kings Creek\Drawings\014034-00_S-86_BR_04_Interior Bent Plan & Elevation.dgn
10/20/2022

SOUTH CAROLINA DAVIS & FLOYD, INC. No. C00538 CERTIFICATE OF AUTHORIZATION

WORK-IN-PROGRESS
NOT FOR CONSTRUCTION

CONCEPTUAL PLANS
10/24/22

REV.			
REV.			
REV.			
REVIEWED	CLM		
QUAN.			
DR.	DLH	RGS	10-22
DES.	DLH	RGS	10-22
	BY	CHK.	DATE

DAVIS & FLOYD
SINCE 1954
1319 HWY 72/221 E.
GREENWOOD, SC 29649
(864) 229-5211

SOUTH CAROLINA
DEPARTMENT OF TRANSPORTATION

INTERIOR BENT PLAN AND ELEVATION

COUNTY	ROUTE
CHEROKEE	S-86

BRIDGE PLANS ID	SHEET NO.
P041152-B01	5

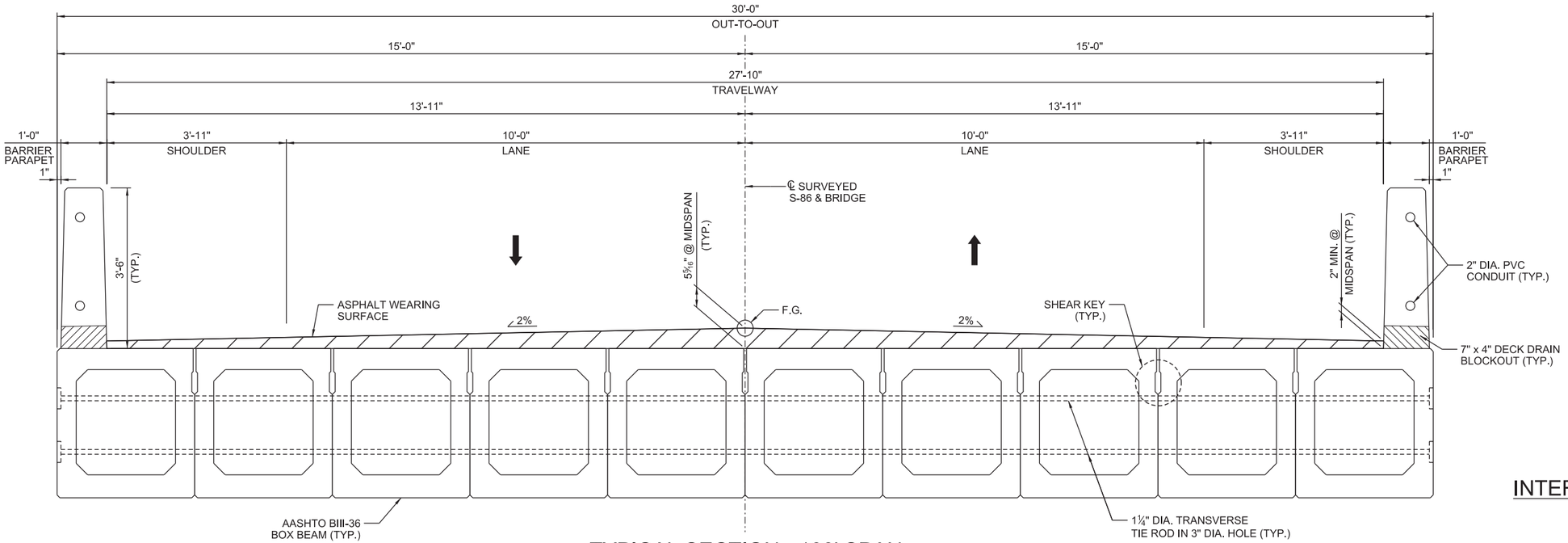

TYPICAL SECTION - 100' SPAN

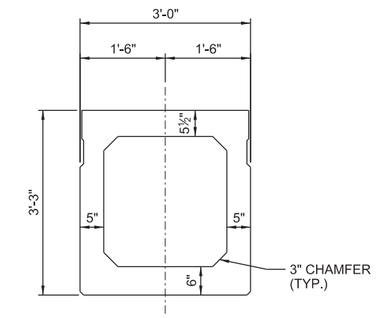

INTERIOR SLAB SECTION - BOX BEAM

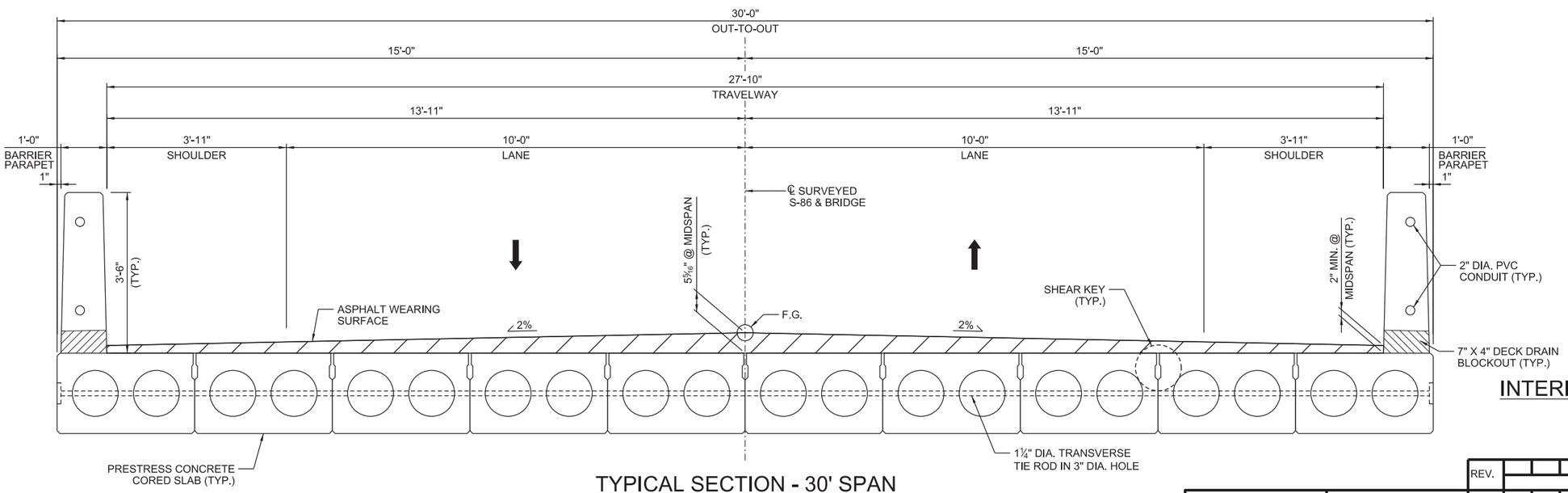

TYPICAL SECTION - 30' SPAN

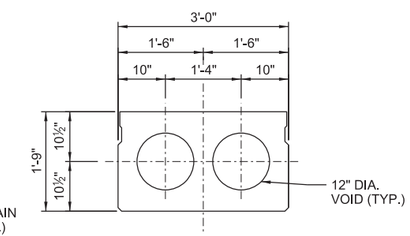

INTERIOR SLAB SECTION - CORED SLAB

SCALE: 1.333 ft / in.
PEN TABLE: G:\Resource\Standards\Bentley\Vertical\Plotting\DO_NOTHING_BRIDGES.tbl
PLOT DRIVER: \\CHS-FS1\Data\Resource\Standards\Bentley\Vertical\Plotting\BRIDGES.pdf MS i.pltcfg
FILE: J:\JobsEven\14034-00\Production\Structural\S-86 BRO Kings Creek\Drawings\014034-00_S-86_BR_05_Typical Section.dgn
10/20/2022

SOUTH CAROLINA DAVIS & FLOYD, INC. No. C00538 CERTIFICATE OF AUTHORIZATION

WORK-IN-PROGRESS
NOT FOR CONSTRUCTION

CONCEPTUAL PLANS
10/24/22

REV.			
REV.			
REV.			
REVIEWED	CLM		
QUAN.			
DR.	DLH	RGS	10-22
DES.	DLH	RGS	10-22
	BY	CHK.	DATE

DAVIS & FLOYD
SINCE 1954
1319 HWY 72/221 E.
GREENWOOD, SC 29649
(864) 229-5211

SOUTH CAROLINA
DEPARTMENT OF TRANSPORTATION

TYPICAL SUPERSTRUCTURE SECTIONS

COUNTY	ROUTE
CHEROKEE	S-86

BRIDGE PLANS ID	SHEET NO.
P041149-BO1	1

INDEX OF SHEETS

1. TITLE SHEET
2. BRIDGE PLAN AND PROFILE
3. END BENT 1 PLAN & ELEVATION
4. END BENT 2 PLAN & ELEVATION
5. TYPICAL SUPERSTRUCTURE SECTION

South Carolina Department of Transportation

PROPOSED PLANS FOR CHEROKEE COUNTY PROJECT ID P041149 S-106 (ISLAND CREEK ROAD) REPLACE BRIDGE OVER SUCK CREEK

Design Reference for these plans is the:

LVB

Supplemental Design Criteria For
Low Volume Bridge Replacement Projects

Submit Shop Plans to:

Davis & Floyd, Inc.
1319 Highway 72/221E
Greenwood, SC 29649

Telephone: (864) 229-5211

Approximate Location of Bridge is

Latitude	35 - 07' - 23" N
Longitude	81 - 50' - 02" W

SITE LOCATION

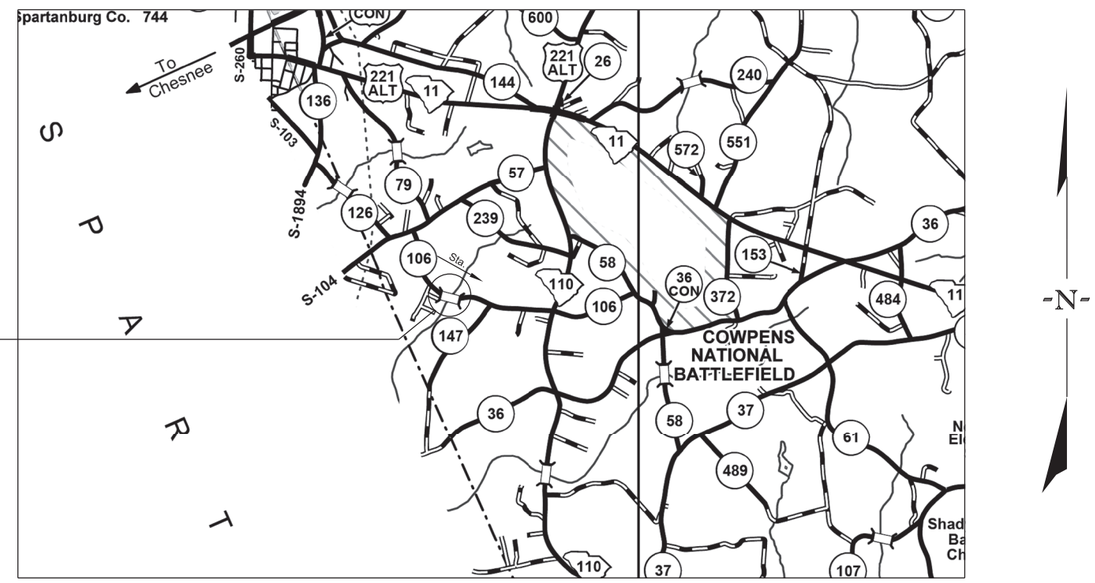

LAYOUT
(NOT TO SCALE)

SCDOT REVIEW	FOR CONSTRUCTION INITIAL	FOR CONSTRUCTION DATE
PRECONSTRUCTION SUPPORT - ROAD		
PRECONSTRUCTION SUPPORT - STRUCTURES		
RPG - DESIGN MANAGER		
RPG - PROGRAM MANAGER		

THE INITIALS ABOVE DO NOT RELIEVE THE ENGINEER OF RECORD OF THE RESPONSIBILITY TO DESIGN THIS PROJECT IN ACCORDANCE WITH ALL APPLICABLE CRITERIA.

3 DAYS BEFORE DIGGING IN
SOUTH CAROLINA

CALL 811

SOUTH CAROLINA 811 (SC811)
WWW.SC811.COM
ALL UTILITIES MAY NOT BE A MEMBER OF SC811

ASSET ID TBD

TRAFFIC DATA

2020 ADT 225 V.P.D.

2040 ADT 329 V.P.D.

TRUCKS 8 %

NET LENGTH OF ROADWAY	0.000	MILES
NET LENGTH OF BRIDGES	0.011	MILES
NET LENGTH OF PROJECT	0.011	MILES
LENGTH OF EXCEPTIONS	0.000	MILES
GROSS LENGTH OF PROJECT	0.011	MILES

NOTE: EXCEPT AS MAY OTHERWISE BE SPECIFIED ON THE PLANS OR IN THE SPECIAL PROVISIONS, ALL MATERIALS AND WORKMANSHIP ON THIS PROJECT SHALL CONFORM TO THE SOUTH CAROLINA DEPARTMENT OF TRANSPORTATION STANDARD SPECIFICATIONS FOR HIGHWAY CONSTRUCTION (2007 EDITION) AND THE STANDARD DRAWINGS FOR ROAD CONSTRUCTION IN EFFECT AT THE TIME OF LETTING.

CONSULTING ENGINEERING FIRM

SOUTH CAROLINA
DAVIS & FLOYD, INC.
No. C00538
CERTIFICATE OF AUTHORIZATION

ENGINEER OF RECORD

CONCEPTUAL PLANS
10/24/22

FOR CONSTRUCTION : _____ _____
DATE

SCALE: 50.000 ft / in.
PEN TABLE: G:\Resource\Standards\Bentley\Vertical\Plotting\DO_NOTHING_BRIDGES.tbl
PLOT DRIVER: \\CHS-FS1\Data\Resource\Standards\Bentley\Vertical\Plotting\BRIDGES pdf MS i.pltcfg
FILE: J:\JobsEven\14034-00\Production\Structural\S-106 BRO Suck Creek\Drawings\014034-00_S-106_BR_01_Title Sheet.dgn
10/20/2022

BRIDGE PLANS ID	SHEET NO.
P041149-B01	2

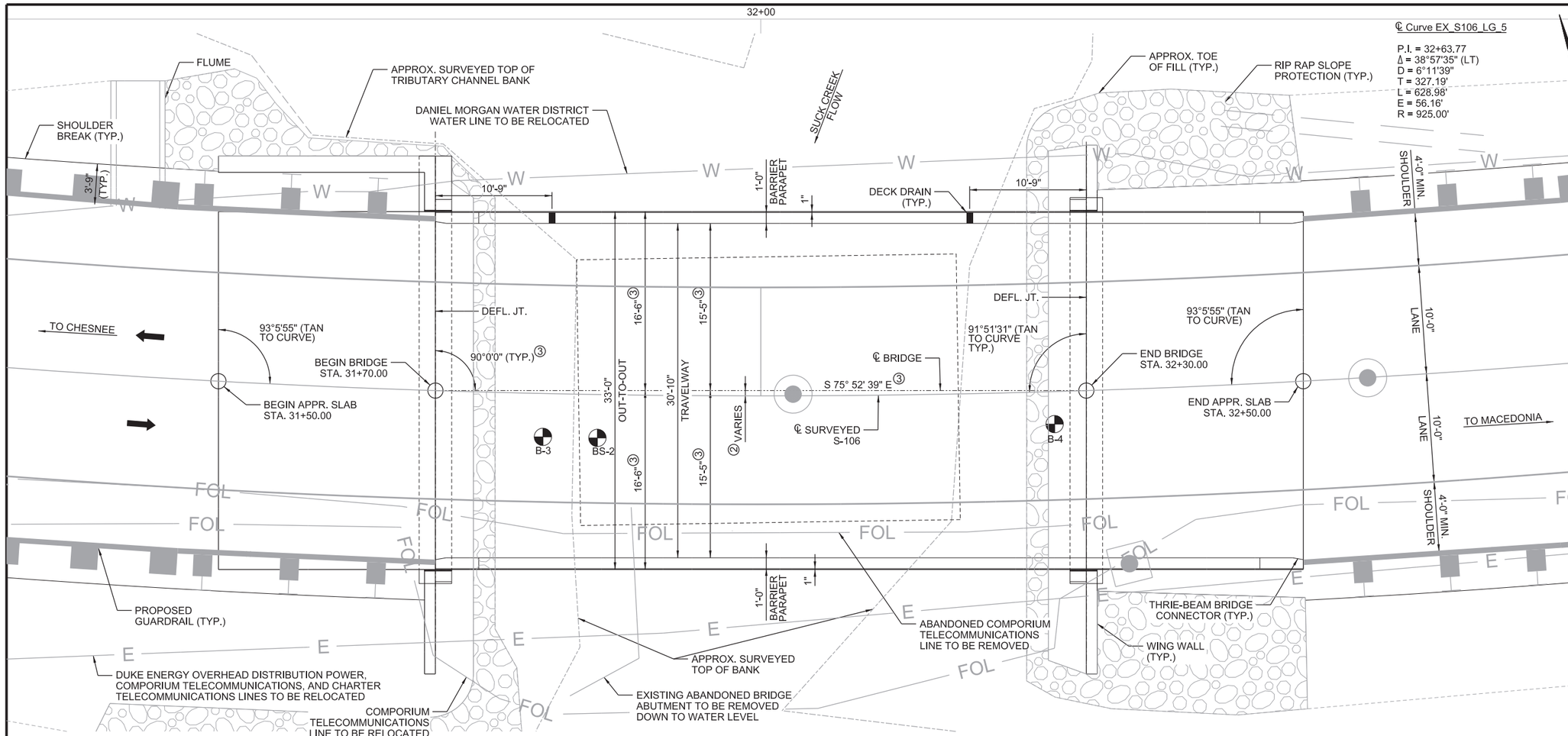

PLAN

CONTROL POINTS

ID: CP7
DESCRIPTION: BRDG NL
STATION: 28+07.08
OFFSET: 10.62' RT
NORTHING: 1198139.9570'
EASTING: 1750213.2100'
ELEVATION: 867.72'

ID: CP8
DESCRIPTION: BRDG NL
STATION: 32+33.40
OFFSET: 16.08' RT
NORTHING: 1197955.1920'
EASTING: 1750600.0370'
ELEVATION: 849.53'

LEGEND

F - DENOTES FIXED BEARING

DIRECTION OF TRAVEL

BORING LOCATION

EXISTING GROUND LINE
EXISTING GROUND LINE 25' LEFT
EXSITING GROUND LINE 25' RIGHT

NOTES:

① THE WATER ELEVATION SHOWN WAS OBSERVED AT THE TIME OF SURVEY. THE ELEVATION IS FOR INFORMATION ONLY AND THE ACTUAL WATER ELEVATION DURING CONSTRUCTION MAY VARY DEPENDING ON WEATHER CONDITIONS AND SEASONAL FLUCTUATIONS.

② 0" MIN. @ BEGINNING & END OF BRIDGE, 5 13/16" MAX @ MIDSPAN.

③ MEASURED TO/ALONG ℄ OF BRIDGE.

EXISTING & PROPOSED R/W BEYOND LIMITS OF SHEET.

EXISTING UTILITIES TO BE RELOCATED PRIOR TO CONSTRUCTION UNLESS NOTED OTHERWISE.

VERTICAL CURVE DATA

(-)6.523% (+)3.257%

VPI = 30+90.00
ELEV. = 848.420
L.C. = 330'

HYDRO DATA

D.A. = 1.0 SQ. MI.
Q_{25} = 515 CFS
$ELEV._{25}$ = 844.23' W/ 0.09' OF BACKWATER
$AREA\ FURNISHED_{25}$ = 95 SF
$VEL._{25}$ = 5.73 FPS
Q_{100} = 741 CFS
$ELEV._{100}$ = 845.86' W/ 0.75' OF BACKWATER
$AREA\ FURNISHED_{100}$ = 138 SF
$VEL._{100}$ = 6.24 FPS
OVERTOPPING FLOOD FLOW = N/A
OVERTOPPING FLOOD PROBABILITY = <0.2%

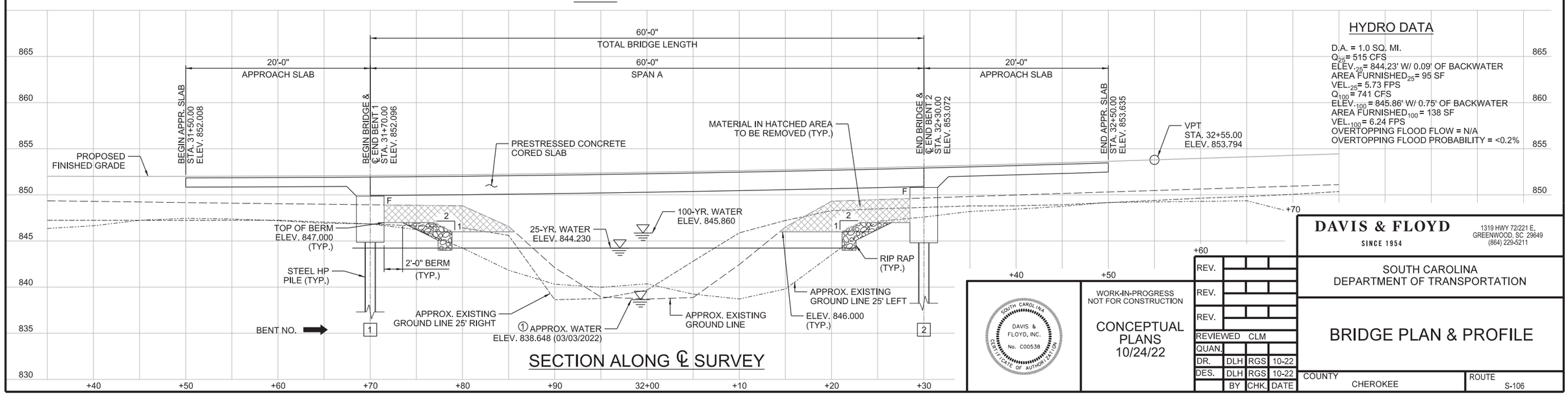

SECTION ALONG ℄ SURVEY

DAVIS & FLOYD
SINCE 1954
1319 HWY 72/221 E.
GREENWOOD, SC 29649
(864) 229-5211

SOUTH CAROLINA DEPARTMENT OF TRANSPORTATION

SOUTH CAROLINA DAVIS & FLOYD, INC. No. C00538 CERTIFICATE OF AUTHORIZATION

WORK-IN-PROGRESS NOT FOR CONSTRUCTION

CONCEPTUAL PLANS 10/24/22

REV.			
REV.			
REV.			
REVIEWED	CLM		
QUAN.			
DR.	DLH	RGS	10-22
DES.	DLH	RGS	10-22
	BY	CHK.	DATE

BRIDGE PLAN & PROFILE

COUNTY	ROUTE
CHEROKEE	S-106

SCALE: 5.333 ft / in.
PEN TABLE: G:\Resource\Standards\Bentley\Vertical\Plotting\DO_NOTHING_BRIDGES.tbl
PLOT DRIVER: \\CHS-FS1\Data\Resource\Standards\Bentley\Vertical\Plotting\BRIDGES.pdf MS i.pltcfg
FILE: J:\JobsEven\14034-00\Production\Structural\S-106 BRO Suck Creek\Drawings\014034-00_S-106_BR_02_Plan & Profile.dgn
10/20/2022

BRIDGE PLANS ID	SHEET NO.
P041149-B01	3

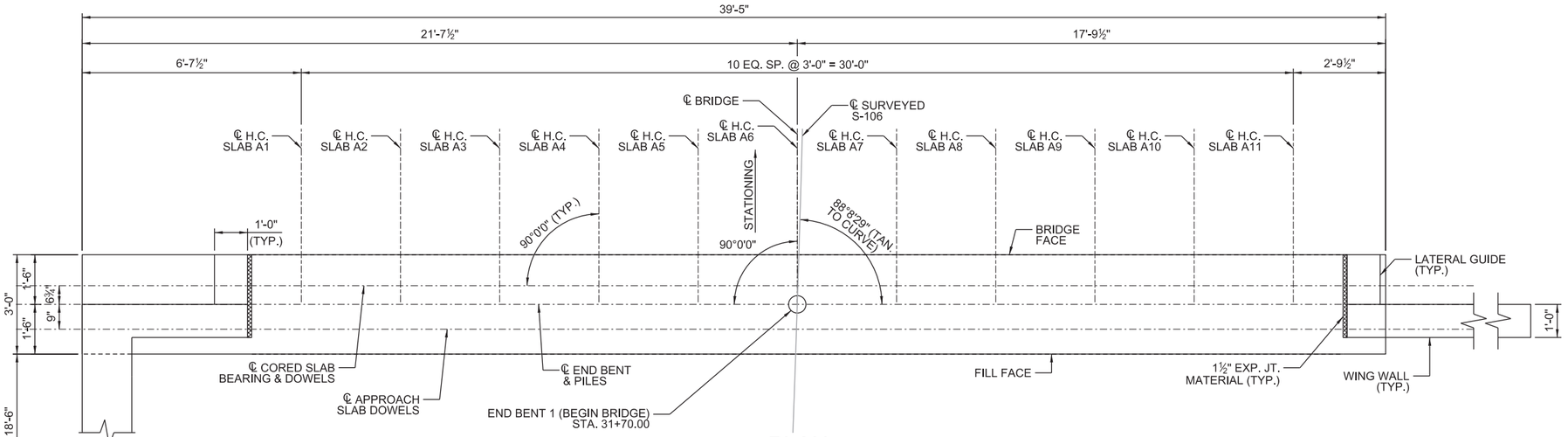

PLAN

(PILES NOT SHOWN FOR CLARITY)

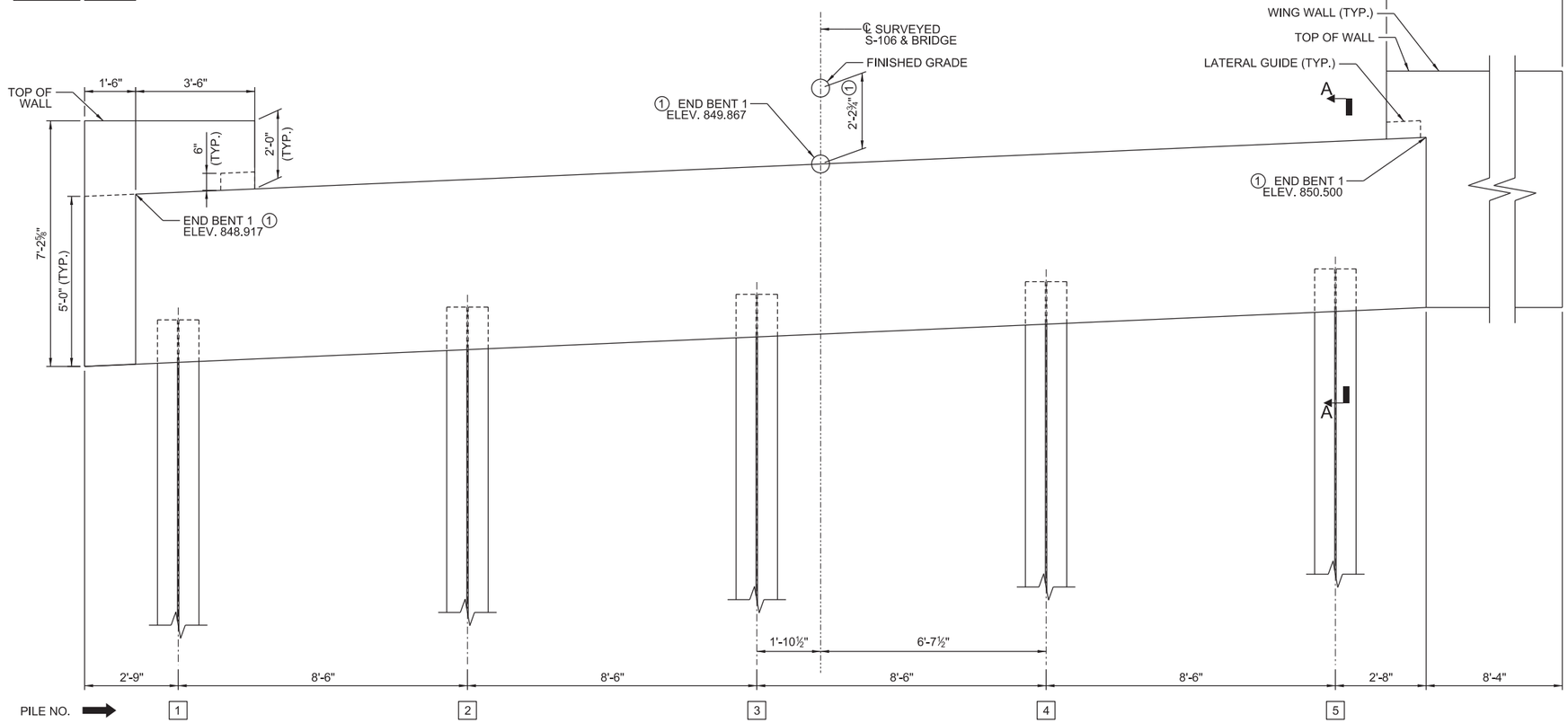

ELEVATION

(LOOKING UPSTATION)

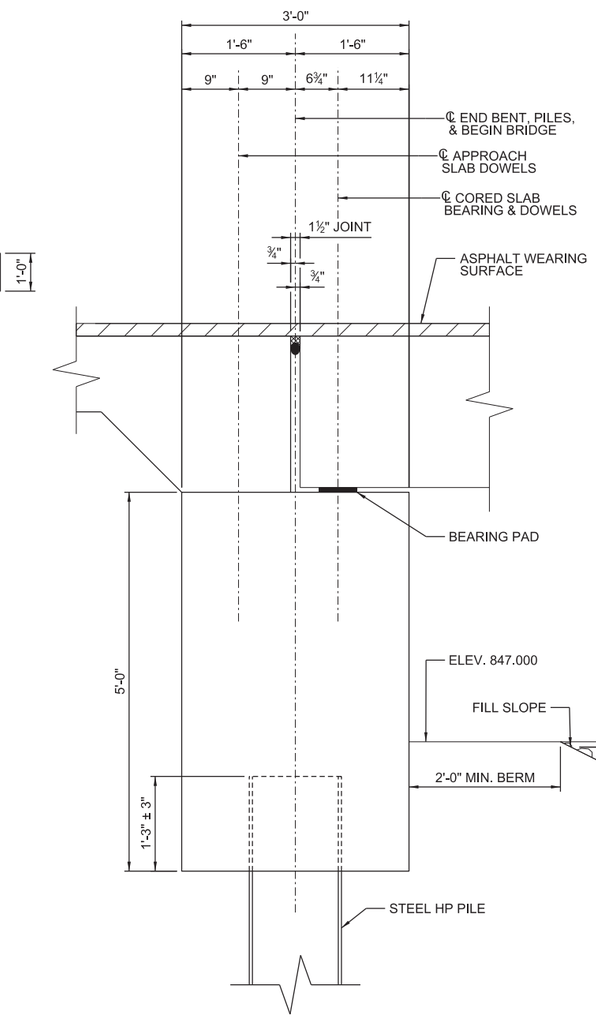

SECTION A-A

① DIMENSION/ELEVATION TO BE VERIFIED ONCE FINAL SLAB CAMBERS ARE DETERMINED

SCALE: 2.000 ft / in.
PEN TABLE: G:\Resource\Standards\Bentley\Vertical\Plotting\DO_NOTHING_BRIDGES.tbl
PLOT DRIVER: \\CHS-FS1\Data\Resource\Standards\Bentley\Vertical\Plotting\BRIDGES.pdf MS i.pltcfg
FILE: J:\JobsEven\14034-00\Production\Structural\S-106 BRO Suck Creek\Drawings\014034-00_S-106_BR_03_End Bent 1 Plan & Elevation.dgn
10/20/2022

SOUTH CAROLINA DAVIS & FLOYD, INC. No. C00538 CERTIFICATE OF AUTHORIZATION

WORK-IN-PROGRESS
NOT FOR CONSTRUCTION

CONCEPTUAL PLANS
10/24/22

REV.			
REV.			
REV.			
REVIEWED	CLM		
QUAN.			
DR.	DLH	RGS	10-22
DES.	DLH	RGS	10-22
	BY	CHK.	DATE

DAVIS & FLOYD
SINCE 1954
1319 HWY 72/221 E.
GREENWOOD, SC 29649
(864) 229-5211

SOUTH CAROLINA
DEPARTMENT OF TRANSPORTATION

END BENT 1 PLAN & ELEVATION

COUNTY: CHEROKEE
ROUTE: S-106

BRIDGE PLANS ID	SHEET NO.
P041149-B01	4

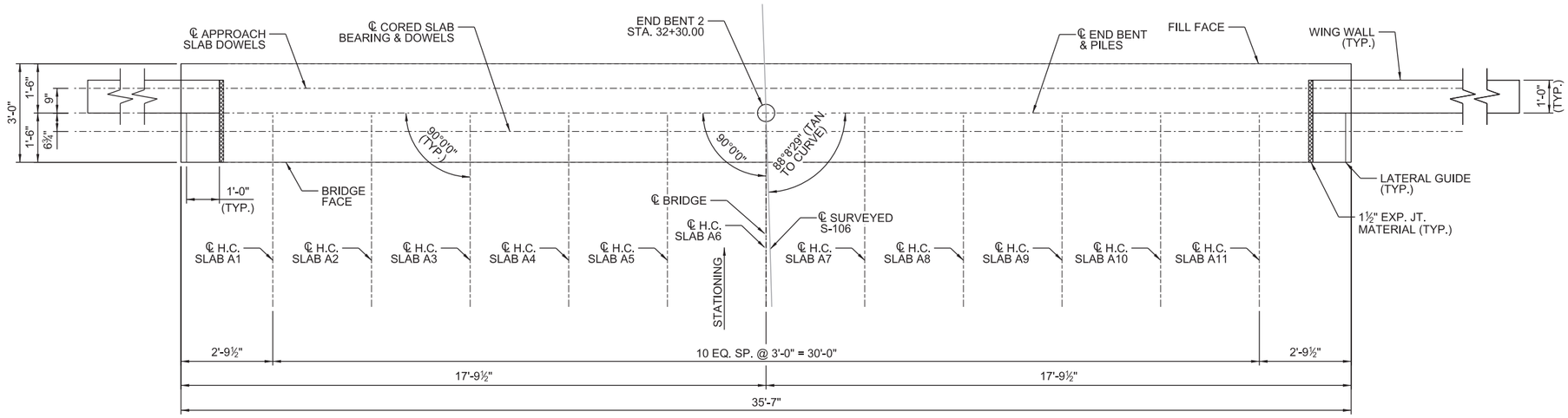

PLAN

(PILES NOT SHOWN FOR CLARITY)

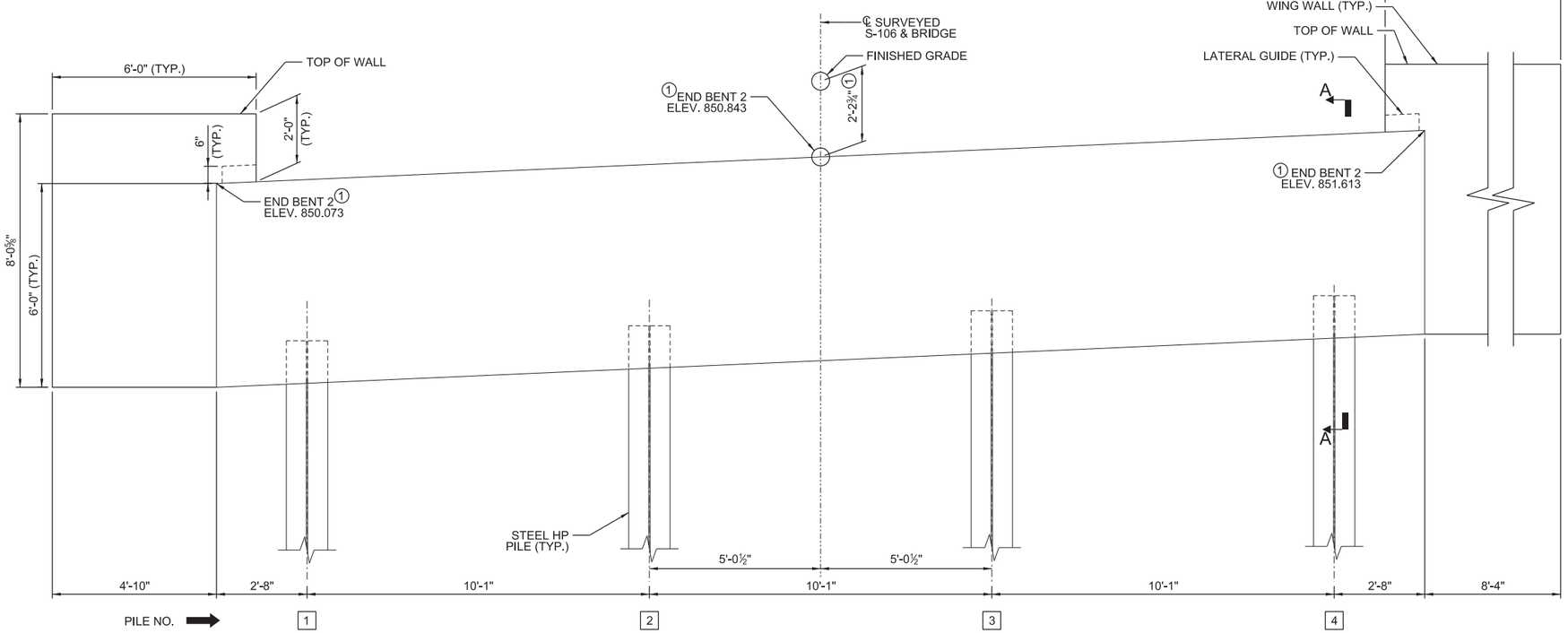

ELEVATION

(LOOKING UPSTATION)

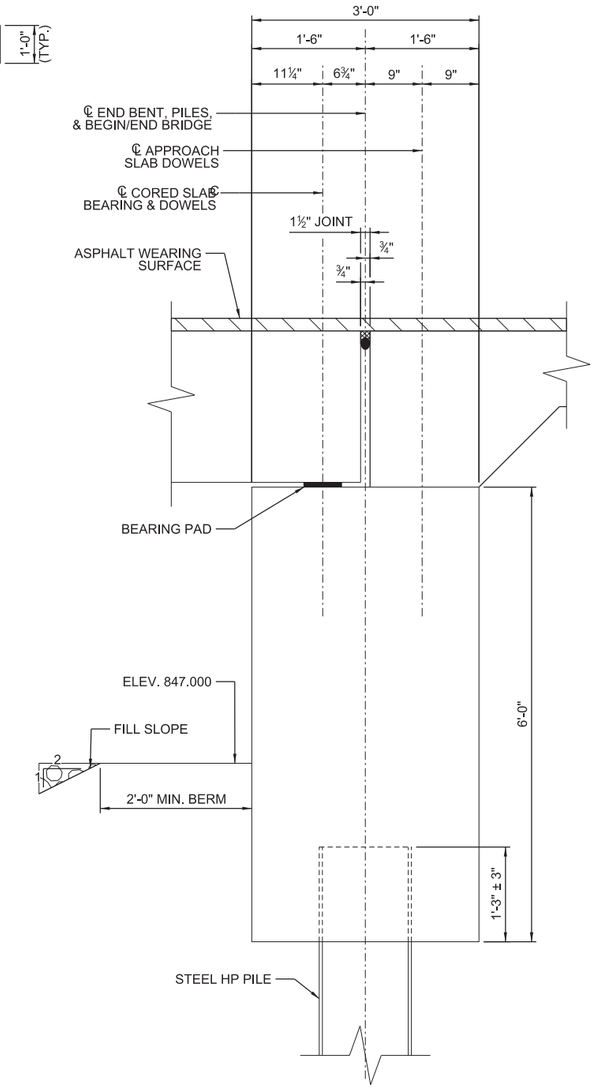

SECTION A-A

① DIMENSION/ELEVATION TO BE VERIFIED ONCE FINAL SLAB CAMBERS ARE DETERMINED

DAVIS & FLOYD
SINCE 1954
1319 HWY 72/221 E.
GREENWOOD, SC 29649
(864) 229-5211

SOUTH CAROLINA DEPARTMENT OF TRANSPORTATION

SOUTH CAROLINA DAVIS & FLOYD, INC. No. C00538 CERTIFICATE OF AUTHORIZATION

WORK-IN-PROGRESS NOT FOR CONSTRUCTION

CONCEPTUAL PLANS 10/24/22

REV.			
REV.			
REV.			
REVIEWED	CLM		
QUAN.			
DR.	DLH	RGS	10-22
DES.	DLH	RGS	10-22
	BY	CHK.	DATE

END BENT 2 PLAN & ELEVATION

COUNTY	ROUTE
CHEROKEE	S-106

SCALE: 2.000 ft / in.
PEN TABLE: G:\Resource\Standards\Bentley\Vertical\Plotting\DO_NOTHING_BRIDGES.tbl
PLOT DRIVER: \\CHS-FS1\Data\Resource\Standards\Bentley\Vertical\Plotting\BRIDGES.pdf MS i.pltcfg
FILE: J:\JobsEven\14034-00\Production\Structural\S-106 BRO Suck Creek\Drawings\014034-00_S-106_BR_04_End Bent 2 Plan & Elevation.dgn
10/20/2022

BRIDGE PLANS ID	SHEET NO.
P041149-B01	5

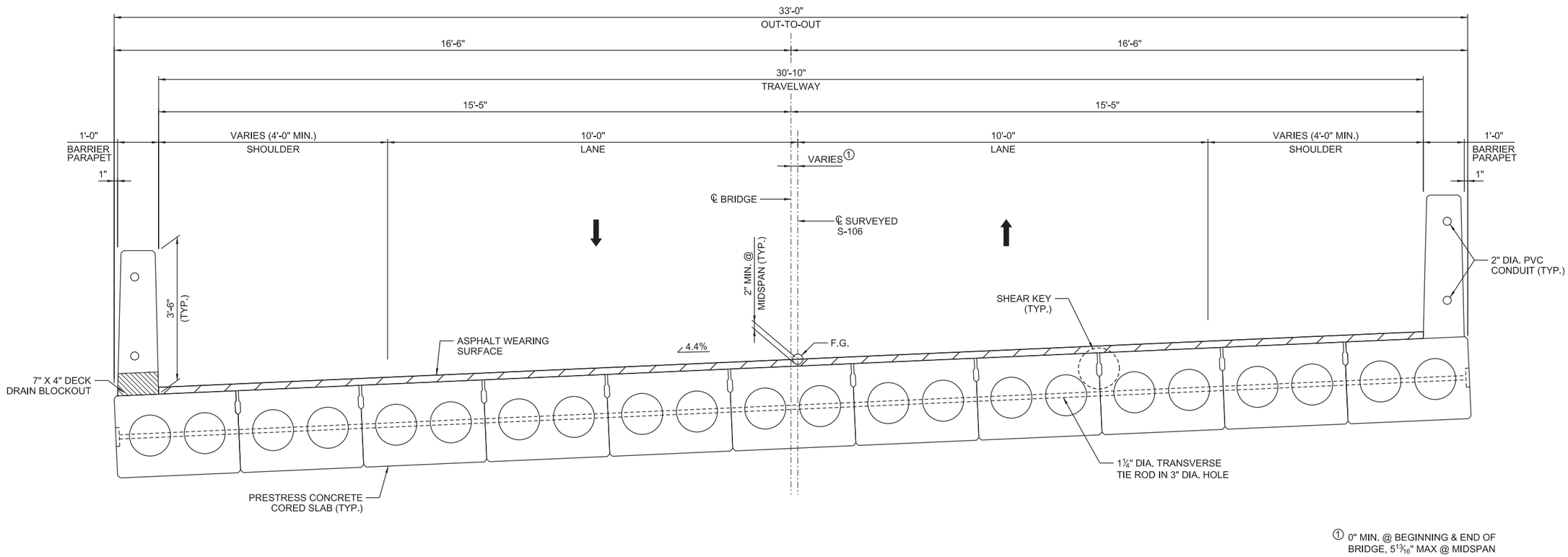

① 0" MIN. @ BEGINNING & END OF BRIDGE, $5\frac{13}{16}$" MAX @ MIDSPAN

TYPICAL SECTION

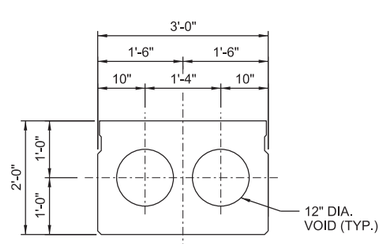

INTERIOR SLAB SECTION

SCALE: 1.333 ft / in.
PEN TABLE: G:\Resource\Standards\Bentley\Vertical\Plotting\DO_NOTHING_BRIDGES.tbl
PLOT DRIVER: \\CHS-FS1\Data\Resource\Standards\Bentley\Vertical\Plotting\BRIDGES.pdf MS i.pltcfg
FILE: J:\JobsEven\14034-00\Production\Structural\S-106 BRO Suck Creek\Drawings\014034-00_S-106_BR_05_Typical Section.dgn
10/20/2022

SOUTH CAROLINA DAVIS & FLOYD, INC. No. C00538 CERTIFICATE OF AUTHORIZATION

WORK-IN-PROGRESS
NOT FOR CONSTRUCTION

CONCEPTUAL PLANS
10/24/22

REV.			
REV.			
REV.			
REVIEWED	CLM		
QUAN.			
DR.	DLH	RGS	10-22
DES.	DLH	RGS	10-22
	BY	CHK.	DATE

DAVIS & FLOYD
SINCE 1954

1319 HWY 72/221 E.
GREENWOOD, SC 29649
(864) 229-5211

SOUTH CAROLINA
DEPARTMENT OF TRANSPORTATION

TYPICAL SUPERSTRUCTURE SECTION

COUNTY	ROUTE
CHEROKEE	S-106

BRIDGE PLANS ID	SHEET NO.
P041151-B01	1

INDEX OF SHEETS

1. TITLE SHEET
2. BRIDGE PLAN AND PROFILE
3. END BENT 1 PLAN AND ELEVATION
4. INTERIOR BENT 2 PLAN AND ELEVATION
5. END BENT 3 PLAN AND ELEVATION
6. TYPICAL SUPERSTRUCTURE SECTIONS

SCDOT

South Carolina Department of Transportation

PROPOSED PLANS FOR CHEROKEE COUNTY PROJECT ID P041151 S-138 (GOUCHER SCHOOL ROAD) REPLACE BRIDGE OVER GOUCHER CREEK

Design Reference for these plans is the:

LVB

Supplemental Design Criteria For
Low Volume Bridge Replacement Projects

Submit Shop Plans to:

Davis & Floyd, Inc.
1319 Highway 72/221E
Greenwood, SC 29649

Telephone: (864) 229-5211

Approximate Location of Bridge is

Latitude 34° 58' - 30" N
Longitude 81° 41' - 39" W

SITE LOCATION

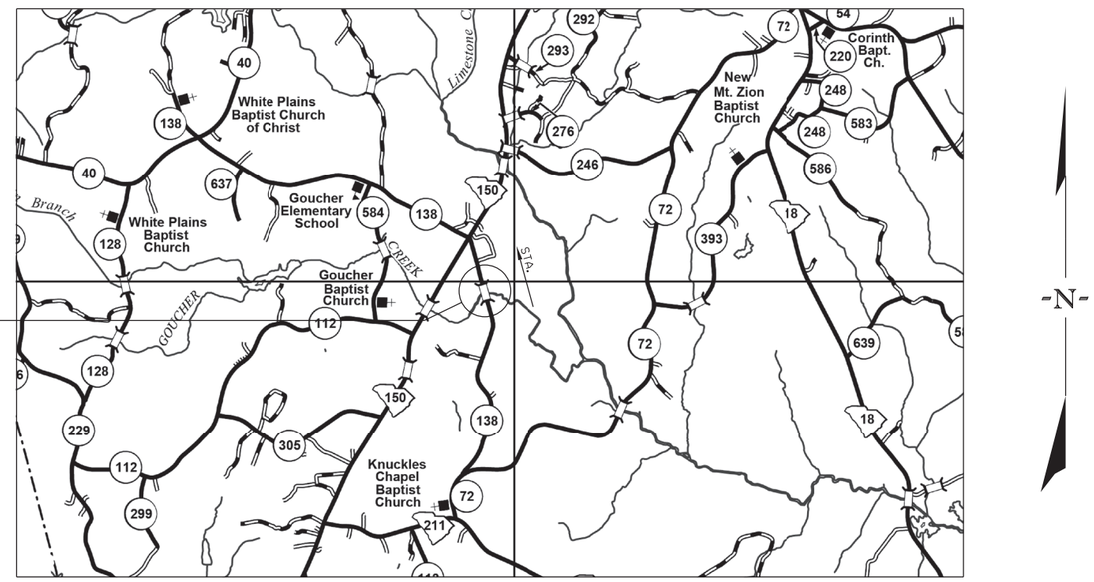

LAYOUT
(NOT TO SCALE)

SCDOT REVIEW	FOR CONSTRUCTION INITIAL	FOR CONSTRUCTION DATE
PRECONSTRUCTION SUPPORT - ROAD		
PRECONSTRUCTION SUPPORT - STRUCTURES		
RPG - DESIGN MANAGER		
RPG - PROGRAM MANAGER		

THE INITIALS ABOVE DO NOT RELIEVE THE ENGINEER OF RECORD OF THE RESPONSIBILITY TO DESIGN THIS PROJECT IN ACCORDANCE WITH ALL APPLICABLE CRITERIA.

3 DAYS BEFORE DIGGING IN
SOUTH CAROLINA

CALL 811

SOUTH CAROLINA 811 (SC811)
WWW.SC811.COM
ALL UTILITIES MAY NOT BE A MEMBER OF SC811

ASSET ID TBD

TRAFFIC DATA

2020 ADT 750 V.P.D.

2040 ADT 1,095 V.P.D.

TRUCKS 8 %

NET LENGTH OF ROADWAY	0.000	MILES
NET LENGTH OF BRIDGES	0.022	MILES
NET LENGTH OF PROJECT	0.022	MILES
LENGTH OF EXCEPTIONS	0.000	MILES
GROSS LENGTH OF PROJECT	0.022	MILES

NOTE: EXCEPT AS MAY OTHERWISE BE SPECIFIED ON THE PLANS OR IN THE SPECIAL PROVISIONS, ALL MATERIALS AND WORKMANSHIP ON THIS PROJECT SHALL CONFORM TO THE SOUTH CAROLINA DEPARTMENT OF TRANSPORTATION STANDARD SPECIFICATIONS FOR HIGHWAY CONSTRUCTION (2007 EDITION) AND THE STANDARD DRAWINGS FOR ROAD CONSTRUCTION IN EFFECT AT THE TIME OF LETTING.

CONSULTING ENGINEERING FIRM

SOUTH CAROLINA
DAVIS & FLOYD, INC.
No. C00538
CERTIFICATE OF AUTHORIZATION

ENGINEER OF RECORD

CONCEPTUAL
PLANS
10/24/22

FOR CONSTRUCTION : _____ _____
DATE

SCALE: 50.000 ft / in.
PEN TABLE: G:\Resource\Standards\Bentley\Vertical\Plotting\DO_NOTHING_BRIDGES.tbl
PLOT DRIVER: G:\Resource\Standards\Bentley\Vertical\Plotting\BRIDGES.pdf MS1.pltcfg
FILE: J:\JobsEven\14034-00\Production\Structural\S-138 BRO Goucher Creek\Drawings\014034-00_S-138_BR_01_Title Sheet.dgn
10/21/2022

BRIDGE PLANS ID	SHEET NO.
P041151-B01	2

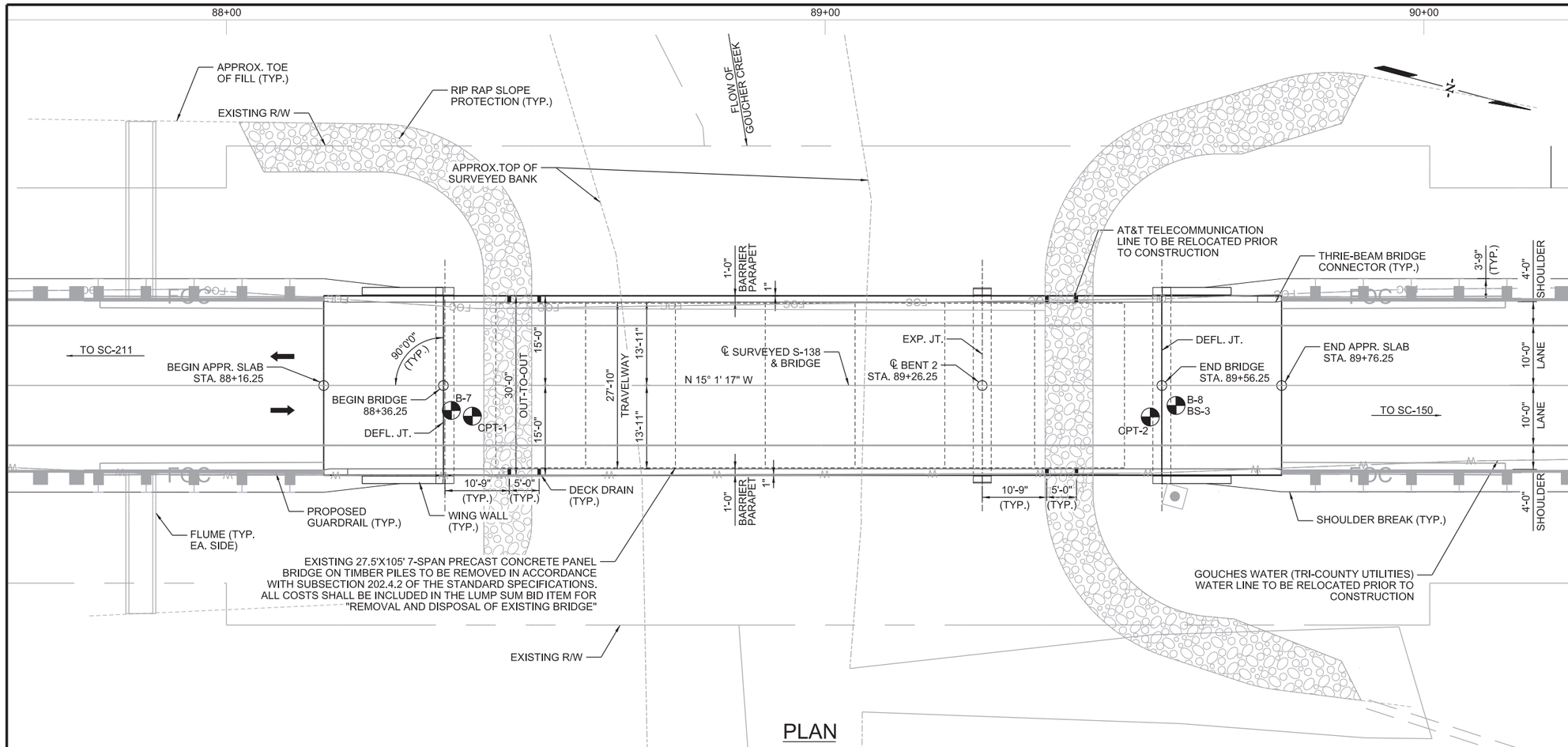

PLAN

CONTROL POINTS

ID: CP3
DESCRIPTION: 8" NAIL
STATION: 89+58.44
OFFSET: 18.52' R
NORTHING: 1143867.569'
EASTING: 1791988.531'
ELEVATION: 541.99'

ID: CP4
DESCRIPTION: 8" NAIL
STATION: 97+44.55
OFFSET: 11.48' R
NORTHING: 1144624.993'
EASTING: 1791777.988'
ELEVATION: 573.01'

LEGEND

F - DENOTES FIXED BEARING
E - DENOTES EXPANSION BEARING

DIRECTION OF TRAVEL

BORING LOCATION

EXISTING GROUND LINE
EXISTING GROUND LINE 45' LEFT
EXSITING GROUND LINE 40' RIGHT

VERTICAL CURVE DATA

(-)1.162% (+)4.761%

VPI = 89+40.00
ELEV. = 539.130
L.C. = 500'

NOTES:

1. THE WATER ELEVATION SHOWN WAS OBSERVED AT THE TIME OF SURVEY. THE ELEVATION IS FOR INFORMATION ONLY AND THE ACTUAL WATER ELEVATION DURING CONSTRUCTION MAY VARY DEPENDING ON WEATHER CONDITIONS AND SEASONAL FLUCTUATIONS.

PROPOSED R/W BEYOND LIMITS OF SHEET.

EXISTING UTILITIES TO BE RELOCATED PRIOR TO CONSTRUCTION UNLESS NOTED OTHERWISE.

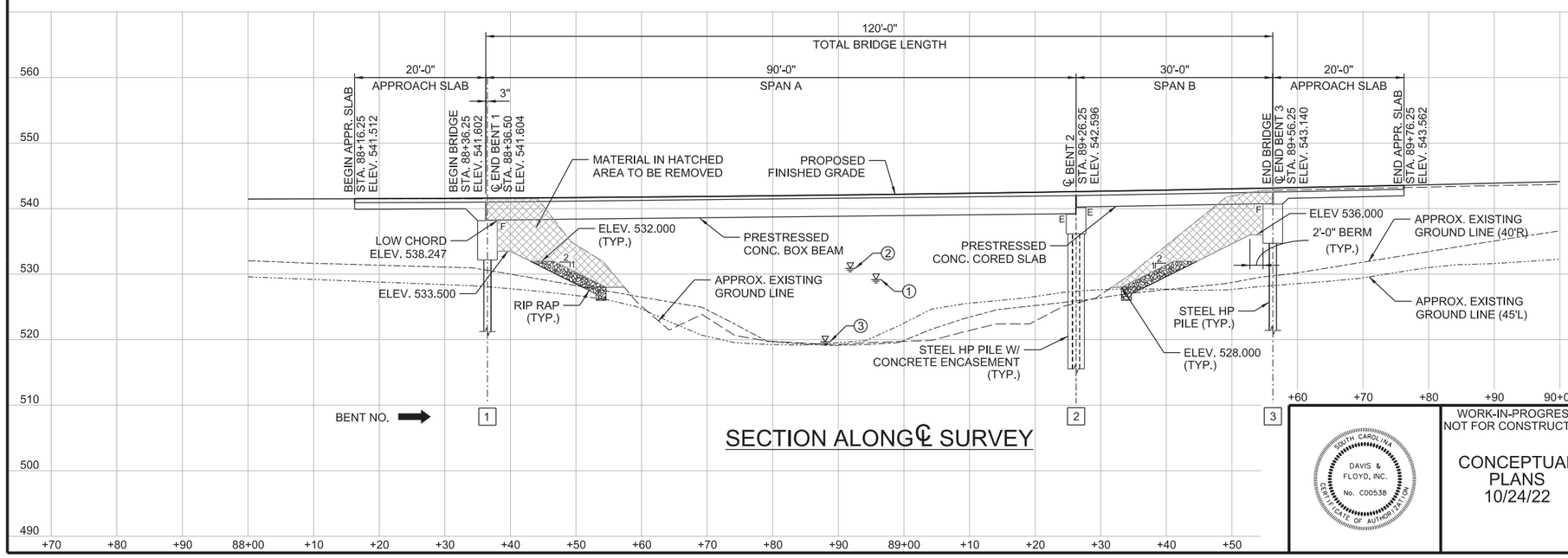

SECTION ALONG ℄ SURVEY

HYDRO DATA

D.A. = 10.1 SQ. MI.
Q = 2,350 CFS
$ELEV._{25}$ = 529.17' W/ 0.25' OF BACKWATER
$AREA\ FURNISHED_{25}$ = 549 SF
$VEL._{25}$ = 6.36 FPS
Q_{100} = 3,290 CFS
$ELEV._{100}$ = 530.88' W/ 0.48' OF BACKWATER
$AREA\ FURNISHED_{100}$ = 683 SF
$VEL._{100}$ = 7.39 FPS
OVERTOPPING FLOOD FLOW = N/A
OVERTOPPING FLOOD PROBABILITY = <0.2%

1. APPROX. 25 YR. WATER ELEV. 529.17'
2. APPROX. 100 YR. WATER ELEV. 530.88'
3. APPROX. WATER ELEV. @ TIME OF SURVEY 519.68' (1/24/22)

SOUTH CAROLINA DAVIS & FLOYD, INC. No. C00538 CERTIFICATE OF AUTHORIZATION

WORK-IN-PROGRESS NOT FOR CONSTRUCTION

CONCEPTUAL PLANS 10/24/22

REV.			
REV.			
REV.			
REVIEWED	CLM		
QUAN.			
DR.	JEB	RGS	10-22
DES.	DLH	RGS	10-22
	BY	CHK.	DATE

DAVIS & FLOYD
SINCE 1954
1319 HWY 72/221 E.
GREENWOOD, SC 29649
(864) 229-5211

SOUTH CAROLINA DEPARTMENT OF TRANSPORTATION

PLAN & PROFILE

COUNTY: CHEROKEE
ROUTE: S-138

SCALE: 10.000 ft / in.
PEN TABLE: G:\Resource\Standards\Bentley\Vertical\Plotting\DO_NOTHING_BRIDGES.tbl
PLOT DRIVER: G:\Resource\Standards\Bentley\Vertical\Plotting\BRIDGES.pdf MS I.pltcfg
J:\JobsEven\14034-00\Production\Structural\S-138 BRO Goucher Creek\Drawings\014034-00_S-138_BR_02_Plan and Profile.dgn
10/21/2022

BRIDGE PLANS ID	SHEET NO.
P041151-B01	3

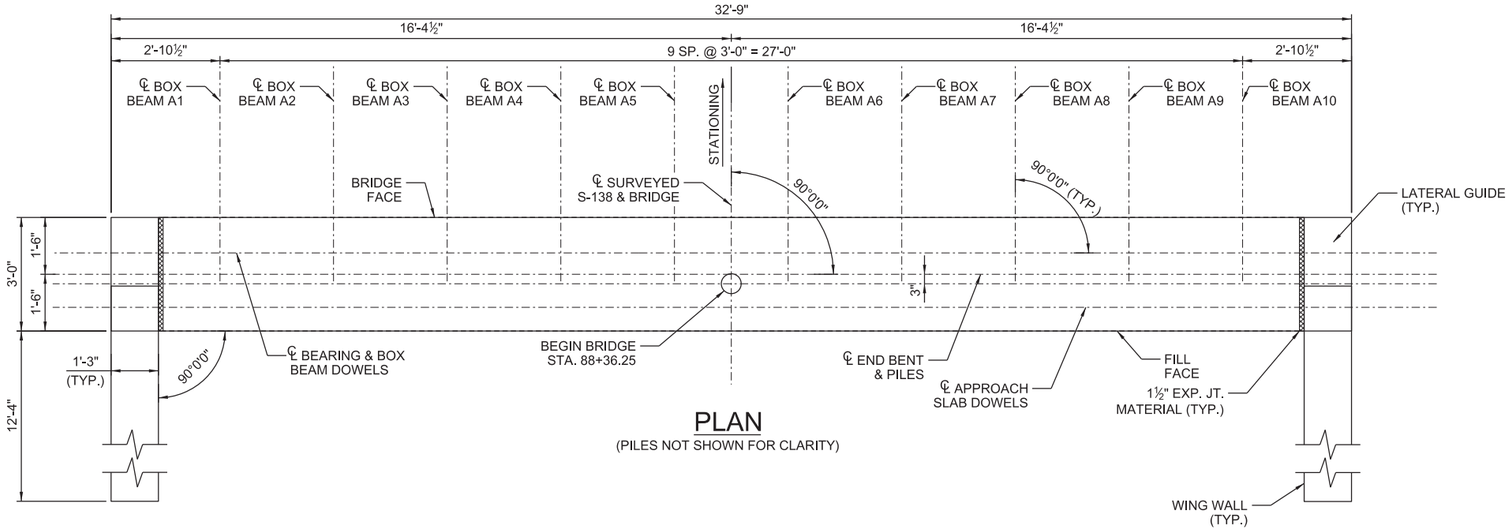

PLAN

(PILES NOT SHOWN FOR CLARITY)

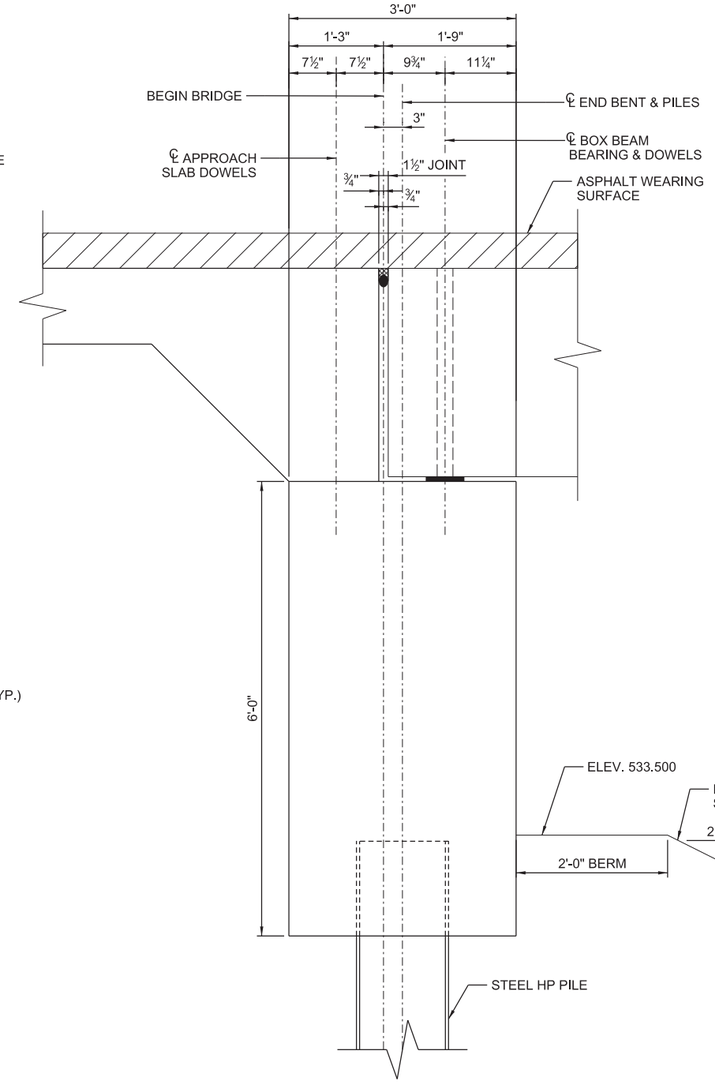

SECTION A-A

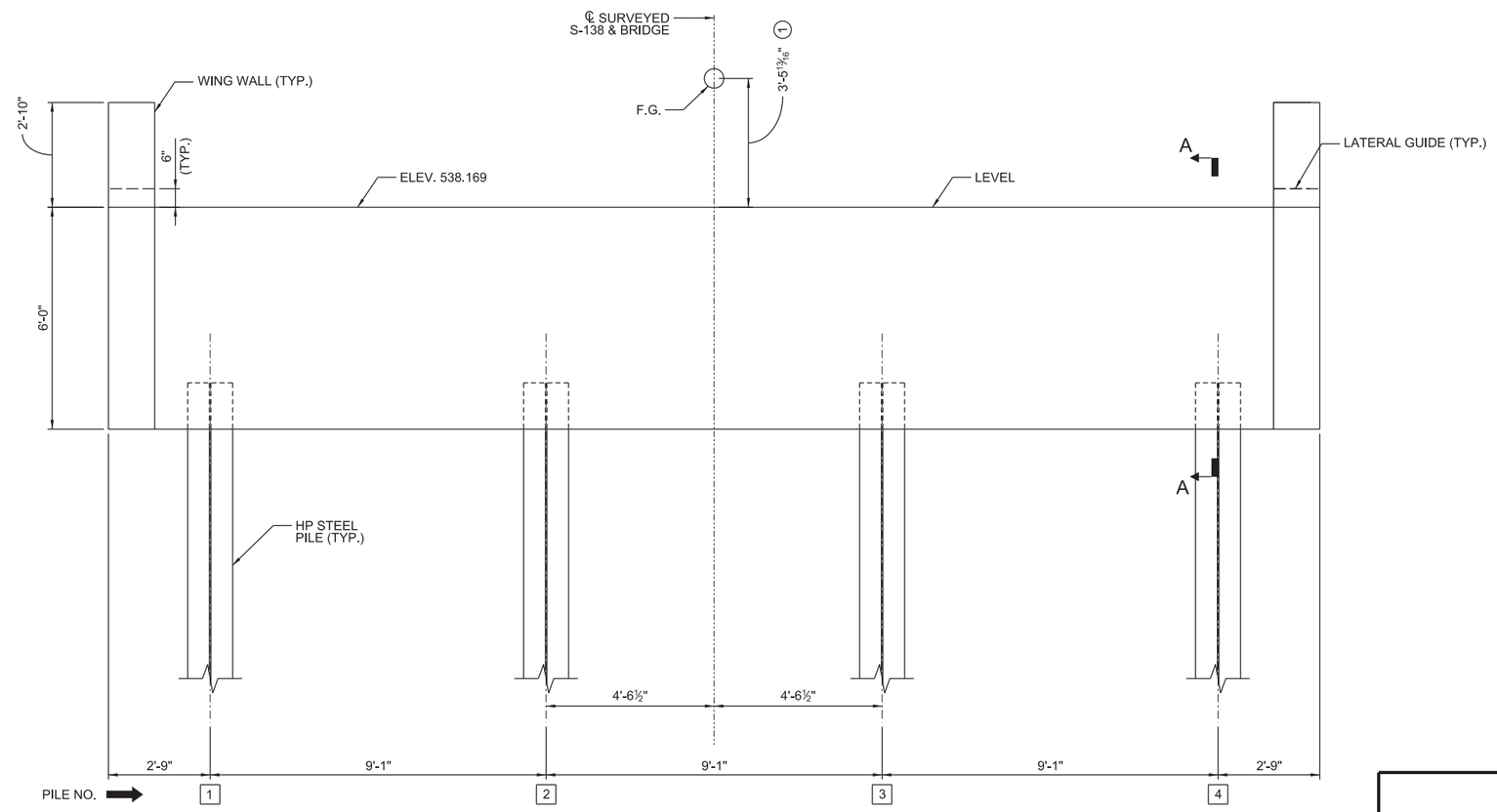

ELEVATION

(LOOKING IN DIRECTION OF STATIONING)

(1) DIMENSION/ELEVATION TO BE VERIFIED ONCE FINAL BEAM CAMBERS ARE DETERMINED

WORK-IN-PROGRESS
NOT FOR CONSTRUCTION

CONCEPTUAL PLANS
10/24/22

REV.			
REV.			
REV.			
REVIEWED	CLM		
QUAN.			
DR.	JEB	RGS	10-22
DES.	DLH	RGS	10-22
	BY	CHK.	DATE

DAVIS & FLOYD
SINCE 1954
1319 HWY 72/221 E.
GREENWOOD, SC 29649
(864) 229-5211

SOUTH CAROLINA
DEPARTMENT OF TRANSPORTATION

END BENT 1 PLAN AND ELEVATION

COUNTY: CHEROKEE
ROUTE: S-138

SCALE: 2.000 ft / in.
PEN TABLE: G:\Resource\Standards\Bentley\Vertical\Plotting\DO_NOTHING_BRIDGES.tbl
PLOT DRIVER: G:\Resource\Standards\Bentley\Vertical\Plotting\BRIDGES.pdf MS i.pltcfg
J:\JobsEven\14034-00\Production\Structural\S-138 BRO Goucher Creek\Drawings\014034-00_S-138_BR_03_End Bent 1 Elevation.dgn
10/21/2022

BRIDGE PLANS ID	SHEET NO.
P041151-B01	4

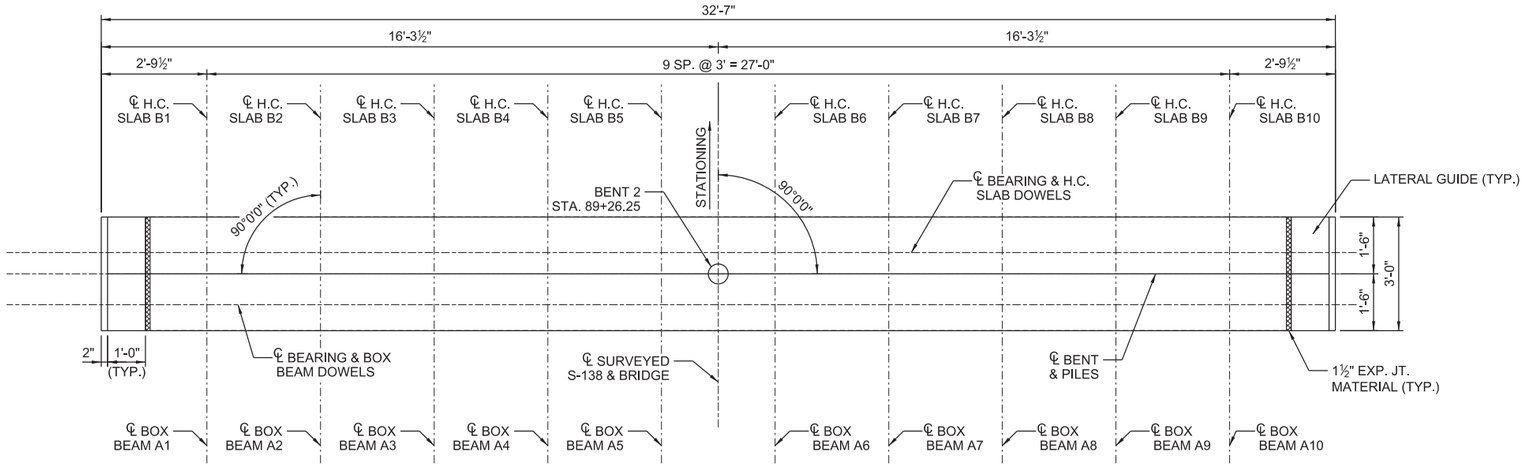

PLAN

(PILES NOT SHOWN FOR CLARITY)

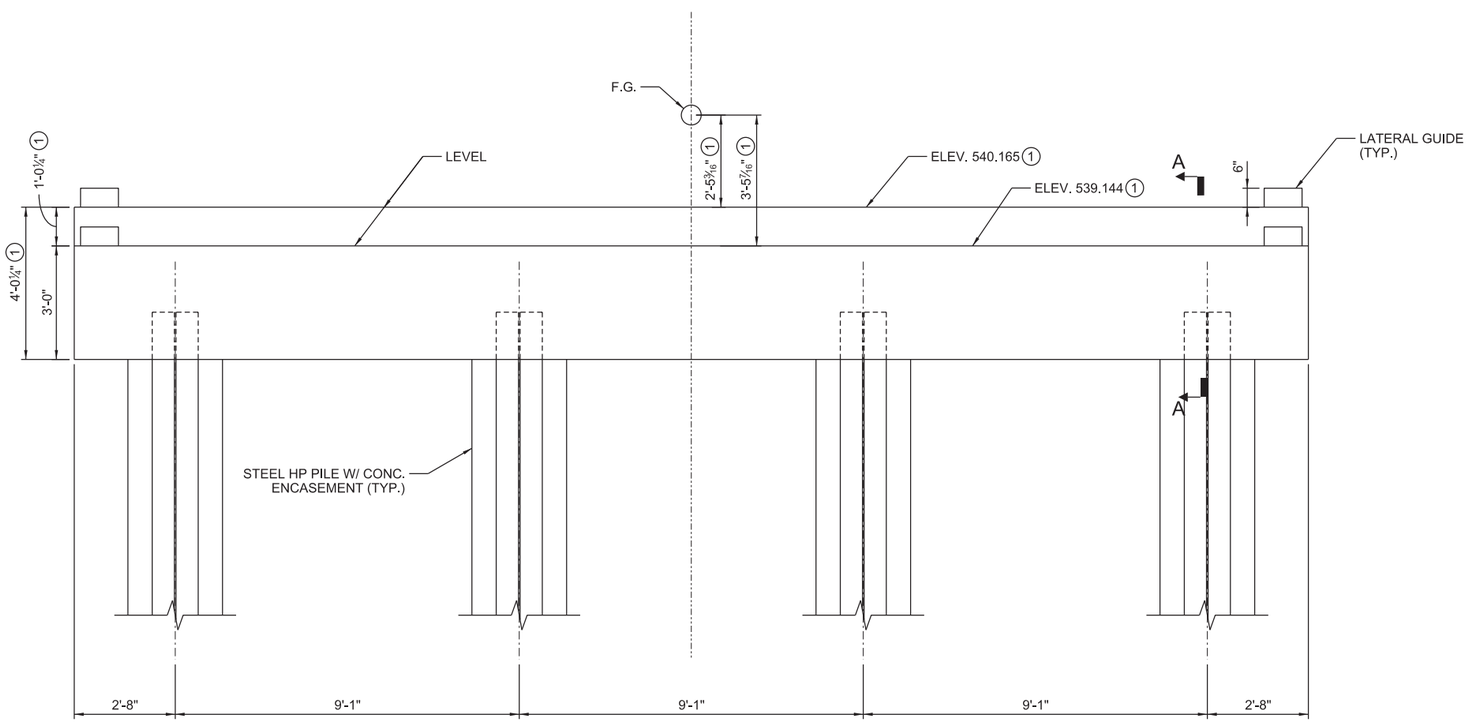

(1) DIMENSION/ELEVATION TO BE VERIFIED ONCE FINAL BEAM/SLAB CAMBERS ARE DETERMINED

ELEVATION

(LOOKING IN DIRECTION OF STATIONING)

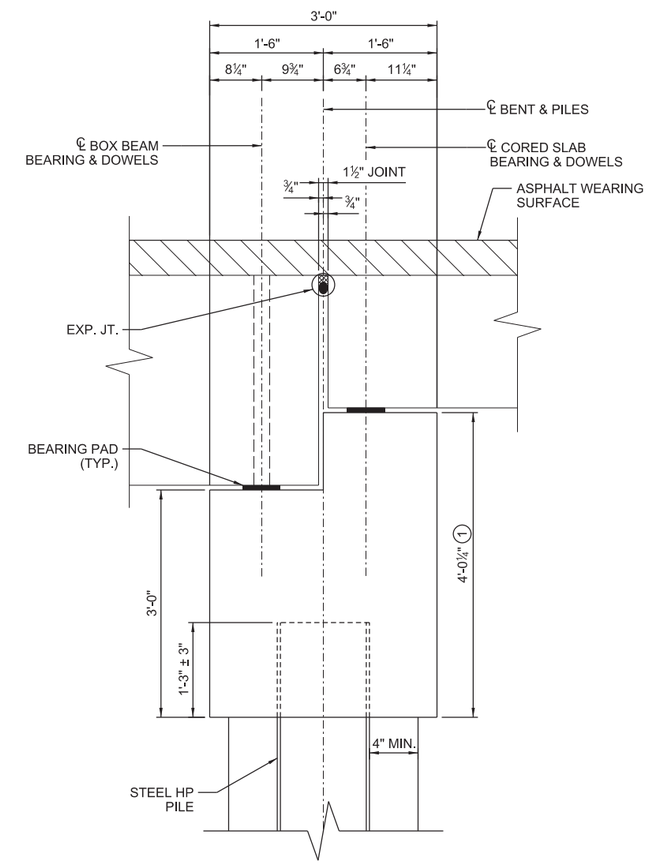

SECTION A-A

WORK-IN-PROGRESS
NOT FOR CONSTRUCTION

CONCEPTUAL PLANS
10/24/22

REV.			
REV.			
REV.			
REVIEWED	CLM		
QUAN.			
DR.	JEB	RGS	10-22
DES.	DLH	RGS	10-22
	BY	CHK.	DATE

DAVIS & FLOYD
SINCE 1954
1319 HWY 72/221 E.
GREENWOOD, SC 29649
(864) 229-5211

SOUTH CAROLINA
DEPARTMENT OF TRANSPORTATION

INTERIOR BENT 2 PLAN AND ELEVATION

COUNTY: CHEROKEE
ROUTE: S-138

SCALE: 2.000 ft / in.
PEN TABLE: G:\Resource\Standards\Bentley\Vertical\Plotting\DO_NOTHING_BRIDGES.tbl
PLOT DRIVER: G:\Resource\Standards\Bentley\Vertical\Plotting\BRIDGES.pdf MS J.pltcfg
J:\JobsEven\14034-00\Production\Structural\S-138 BRO Goucher Creek\Drawings\014034-00_S-138_BR_04_Interior Bent 2 Elevation.dgn
10/21/2022

BRIDGE PLANS ID	SHEET NO.
P041151-B01	5

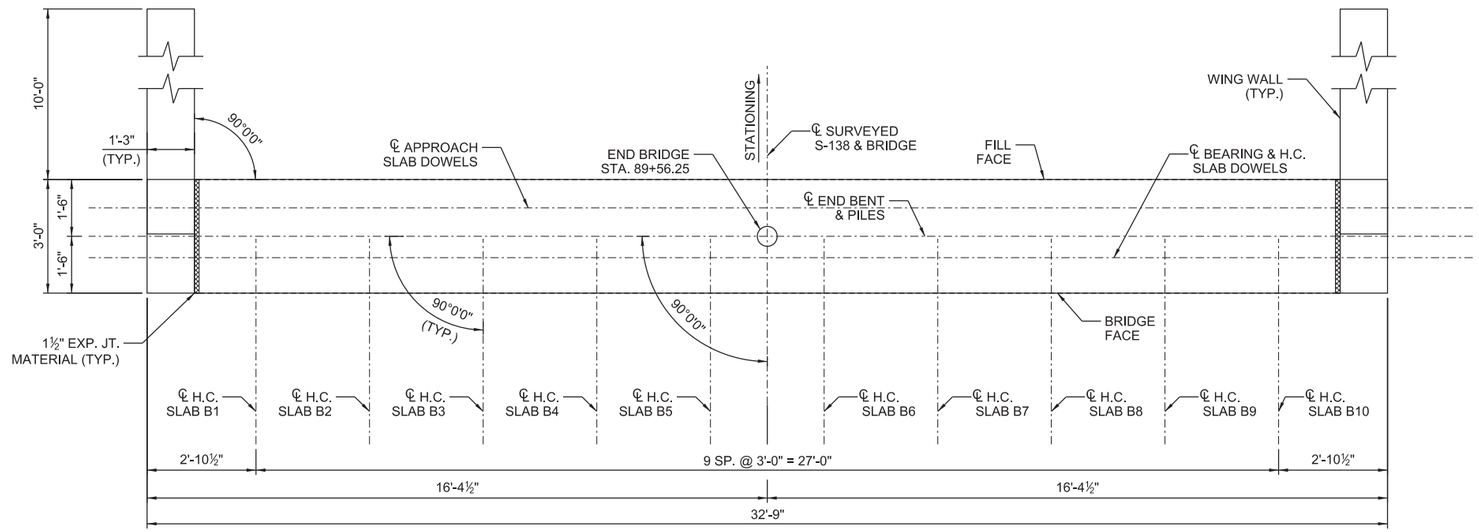

PLAN

(PILES NOT SHOWN FOR CLARITY)

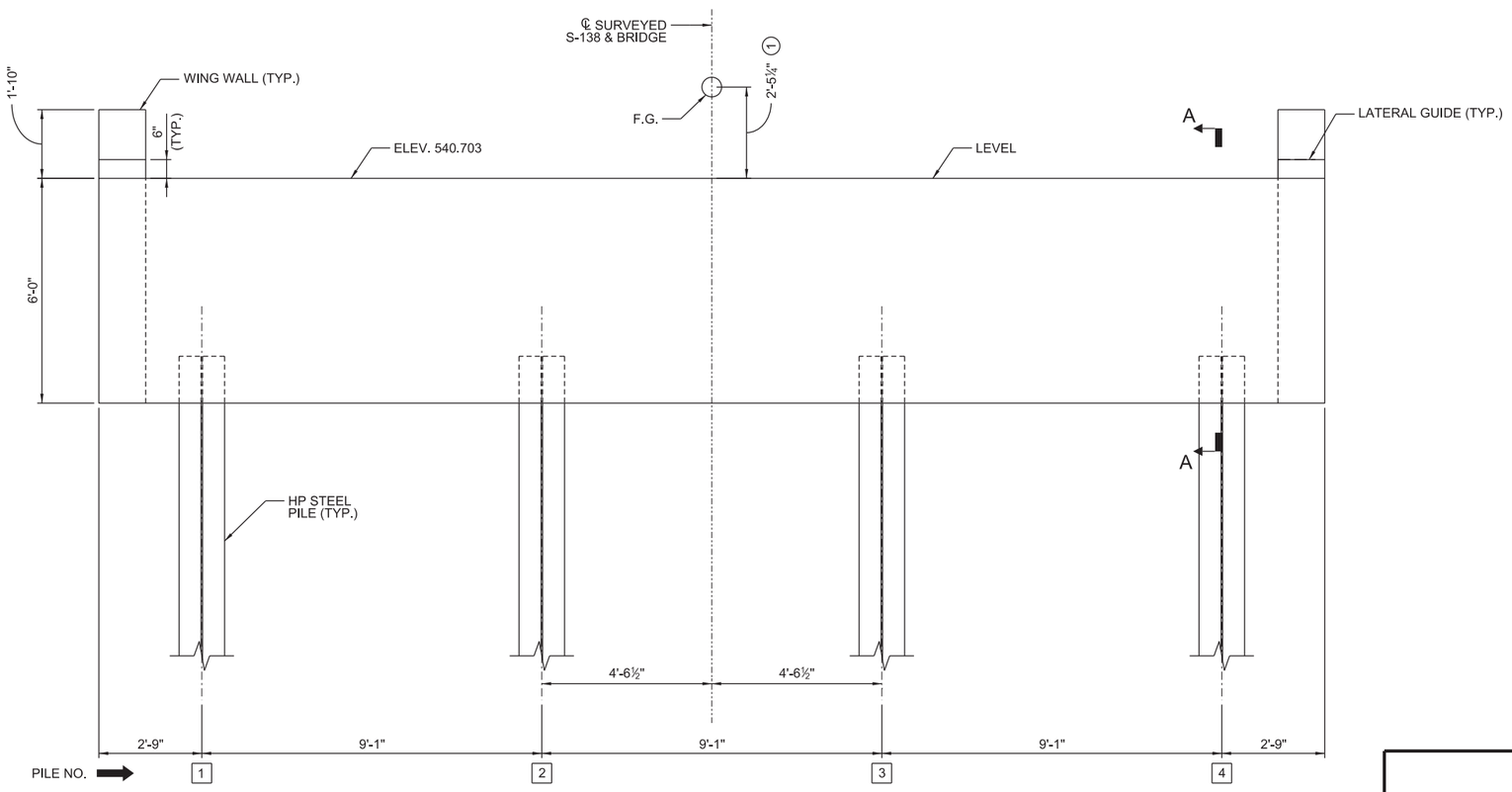

ELEVATION

(LOOKING IN DIRECTION OF STATIONING)

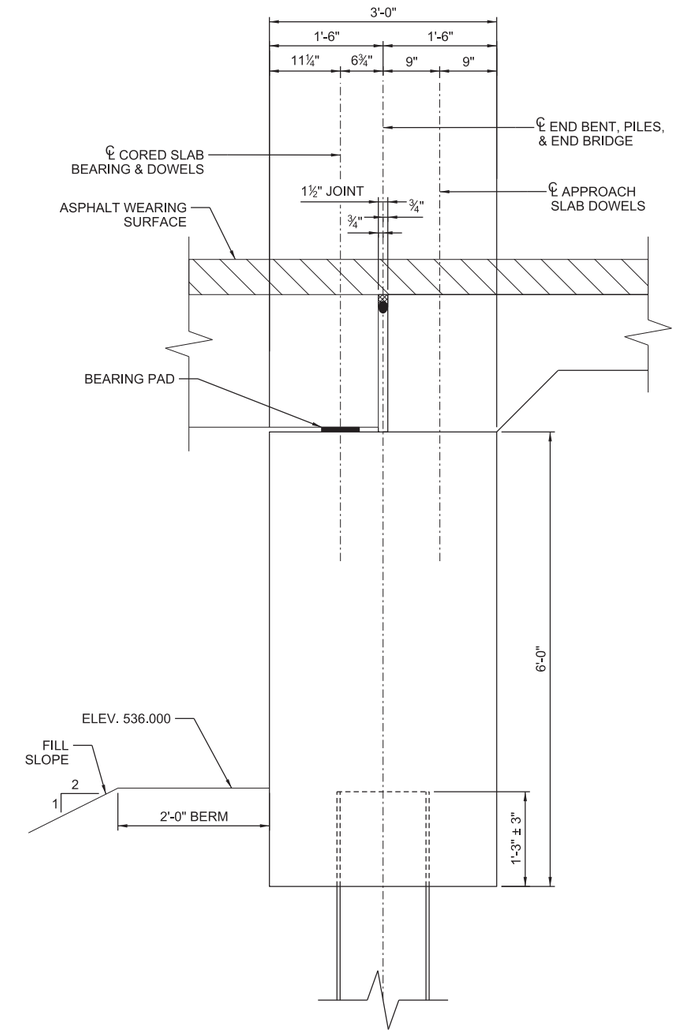

SECTION A-A

① DIMENSION/ELEVATION TO BE VERIFIED ONCE FINAL SLAB CAMBERS ARE DETERMINED

DAVIS & FLOYD
SINCE 1954

1319 HWY 72/221 E.
GREENWOOD, SC 29649
(864) 229-5211

SOUTH CAROLINA
DEPARTMENT OF TRANSPORTATION

WORK-IN-PROGRESS
NOT FOR CONSTRUCTION

CONCEPTUAL PLANS
10/24/22

REV.			
REV.			
REV.			
REVIEWED	CLM		
QUAN.			
DR.	JEB	RGS	10-22
DES.	DLH	RGS	10-22
	BY	CHK.	DATE

END BENT 3 PLAN AND ELEVATION

COUNTY: CHEROKEE
ROUTE: S-138

SCALE: 2.000 ft / in.
PEN TABLE: G:\Resource\Standards\Bentley\Vertical\Plotting\DO_NOTHING_BRIDGES.tbl
PLOT DRIVER: G:\Resource\Standards\Bentley\Vertical\Plotting\BRIDGES.pdf MS i.pltcfg
J:\JobsEven\14034-00\Production\Structural\S-138 BRO Goucher Creek\Drawings\014034-00_S-138_BR_05_End Bent 3 Elevation.dgn
10/21/2022

BRIDGE PLANS ID	SHEET NO.
P041151-B01	6

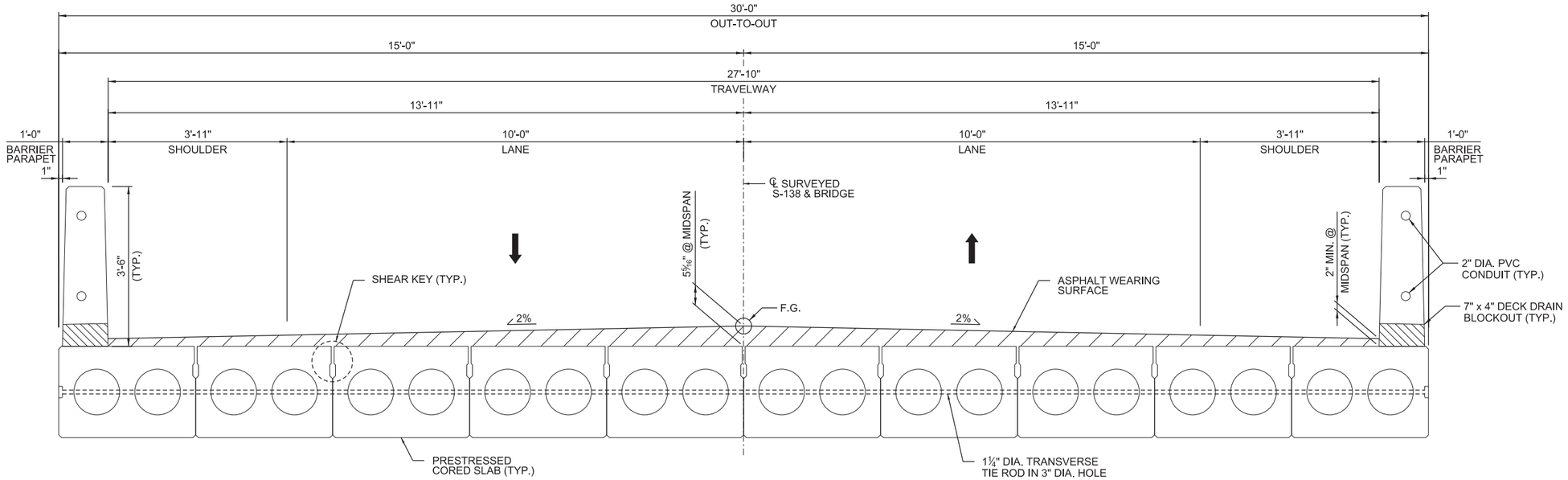

TYPICAL SECTION - 30' SPAN

(LOOKING IN DIRECTION OF STATIONING)

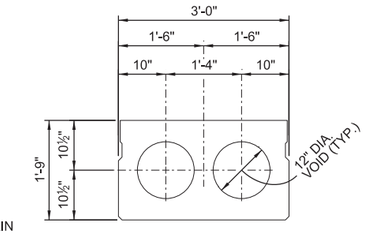

INTERIOR SLAB SECTION 30' SPAN

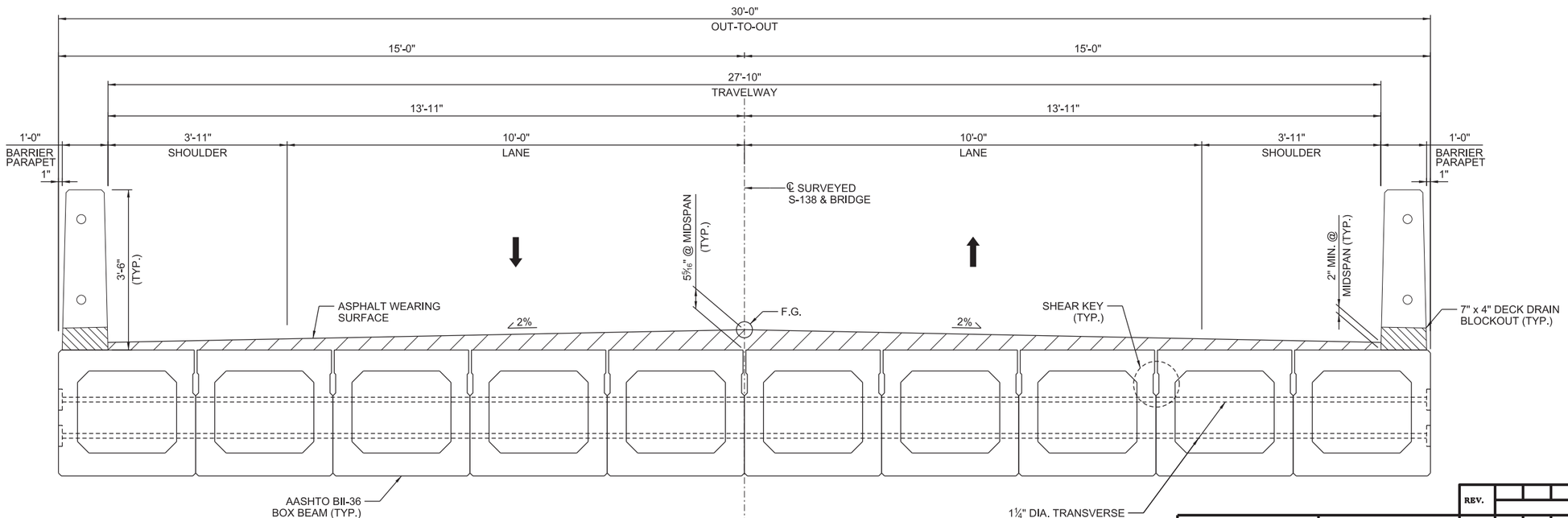

TYPICAL SECTION - 90' SPAN

(LOOKING IN DIRECTION OF STATIONING)

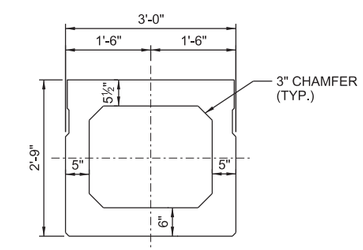

INTERIOR SLAB SECTION BOX BEAM

SCALE: 1.333 ft / in.
PEN TABLE: G:\Resource\Standards\Bentley\Vertical\Plotting\DO_NOTHING_BRIDGES.tbl
PLOT DRIVER: G:\Resource\Standards\Bentley\Vertical\Plotting\BRIDGES pdf MS 1.pltcfg
J:\JobsEven\14034-00\Production\Structural\S-138 BRO Goucher Creek\Drawings\014034-00_S-138_BR_06_Typical Section.dgn
10/21/2022

SOUTH CAROLINA DAVIS & FLOYD, INC. No. C00538 CERTIFICATE OF AUTHORIZATION

WORK-IN-PROGRESS
NOT FOR CONSTRUCTION

CONCEPTUAL PLANS
10/24/22

REV.			
REV.			
REV.			
REVIEWED	CLM		
QUAN.			
DR.	JEB	RGS	10-22
DES.	DLH	RGS	10-22
	BY	CHK.	DATE

DAVIS & FLOYD
SINCE 1954
1319 HWY 72/221 E.
GREENWOOD, SC 29649
(864) 229-5211

SOUTH CAROLINA DEPARTMENT OF TRANSPORTATION

TYPICAL SUPERSTRUCTURE SECTIONS

COUNTY	ROUTE
CHEROKEE	S-138

BRIDGE PLANS ID	SHEET NO.
P041150-B01	1

INDEX OF SHEETS

1. TITLE SHEET
2. BRIDGE PLAN AND PROFILE
3. END BENT PLAN AND ELEVATION
4. TYPICAL SUPERSTRUCTURE SECTION

SCDOT

South Carolina Department of Transportation

PROPOSED PLANS FOR CHEROKEE COUNTY PROJECT ID P041150 S-226 (HAMMETT GROVE ROAD) REPLACE BRIDGE OVER UNNAMED STREAM

Design Reference for these plans is the:

LVB

Supplemental Design Criteria For
Low Volume Bridge Replacement Projects

Submit Shop Plans to:

Davis & Floyd, Inc.
1319 Highway 72/221E
Greenwood, SC 29649

Telephone: (864) 229-5211

Approximate Location of Bridge is

Latitude 34° 56' - 11" N
Longitude 81° 44' - 55" W

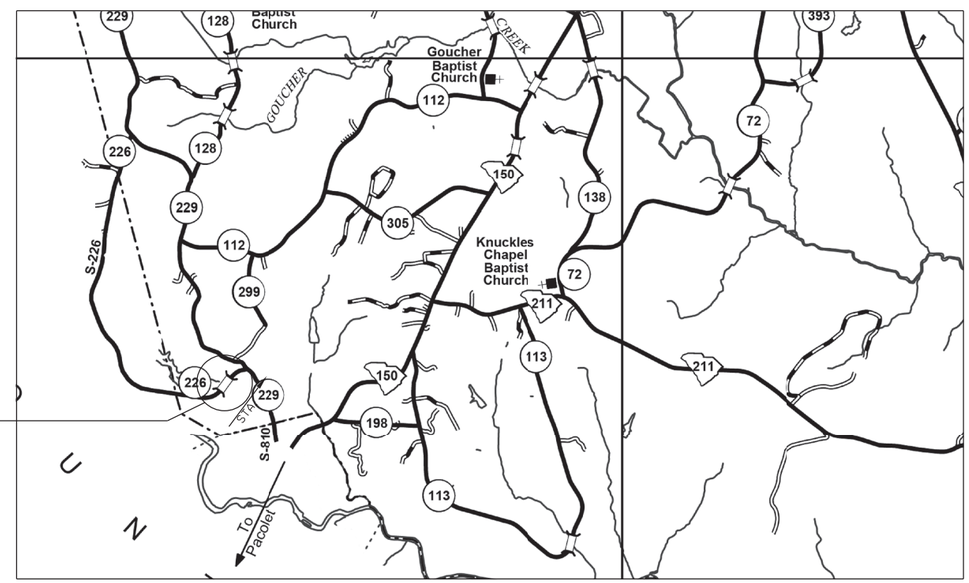

LAYOUT
(NOT TO SCALE)

-N-

SCDOT REVIEW	FOR CONSTRUCTION INITIAL	DATE
PRECONSTRUCTION SUPPORT - ROAD		
PRECONSTRUCTION SUPPORT - STRUCTURES		
RPG - DESIGN MANAGER		
RPG - PROGRAM MANAGER		

THE INITIALS ABOVE DO NOT RELIEVE THE ENGINEER OF RECORD OF THE RESPONSIBILITY TO DESIGN THIS PROJECT IN ACCORDANCE WITH ALL APPLICABLE CRITERIA.

3 DAYS BEFORE DIGGING IN
SOUTH CAROLINA

CALL 811

SOUTH CAROLINA 811 (SC811)
WWW.SC811.COM
ALL UTILITIES MAY NOT BE A MEMBER OF SC811

ASSET ID TBD

TRAFFIC DATA

2020 ADT 200 V.P.D.

2040 ADT 256 V.P.D.

TRUCKS 5 %

NET LENGTH OF ROADWAY	0.000	MILES
NET LENGTH OF BRIDGES	0.015	MILES
NET LENGTH OF PROJECT	0.015	MILES
LENGTH OF EXCEPTIONS	0.000	MILES
GROSS LENGTH OF PROJECT	0.015	MILES

NOTE: EXCEPT AS MAY OTHERWISE BE SPECIFIED ON THE PLANS OR IN THE SPECIAL PROVISIONS, ALL MATERIALS AND WORKMANSHIP ON THIS PROJECT SHALL CONFORM TO THE SOUTH CAROLINA DEPARTMENT OF TRANSPORTATION STANDARD SPECIFICATIONS FOR HIGHWAY CONSTRUCTION (2007 EDITION) AND THE STANDARD DRAWINGS FOR ROAD CONSTRUCTION IN EFFECT AT THE TIME OF LETTING.

CONSULTING ENGINEERING FIRM

SOUTH CAROLINA
DAVIS & FLOYD, INC.
No. C00538
CERTIFICATE OF AUTHORIZATION

ENGINEER OF RECORD

CONCEPTUAL
PLANS
10/24/22

FOR CONSTRUCTION : _____ _____
DATE

SCALE: 50.000 ft / in.
PEN TABLE: G:\Resource\Standards\Bentley\Vertical\Plotting\DO_NOTHING_BRIDGES.tbl
PLOT DRIVER: G:\Resource\Standards\Bentley\Vertical\Plotting\BRIDGES.pdf MS i.pltcfg
FILE: J:\JobsEven\14034-00\Production\Structural\S-226 BRO Unnamed Stream\Drawings\014034-00_S-226_BR_01_Title Sheet.dgn
10/20/2022

BRIDGE PLANS ID	SHEET NO.
P041150-B01	2

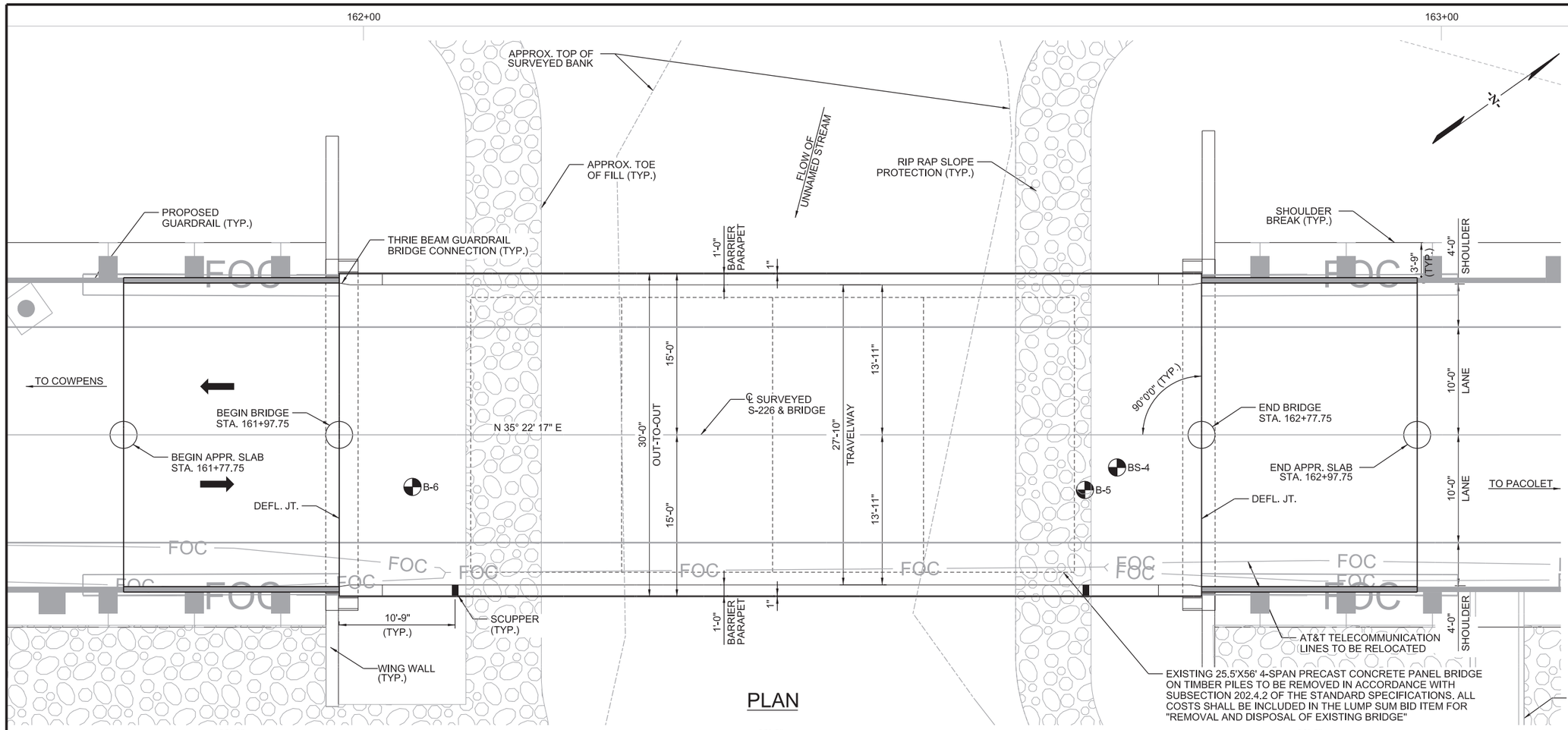

PLAN

CONTROL POINTS

ID: CP4
DESCRIPTION: 8" NAIL
STATION: 161+68.71
OFFSET: 11.72' L
NORTHING: 1129791.377'
EASTING: 1775592.630'
ELEVATION: 554.840'

ID: CP5
DESCRIPTION: 8" NAIL
STATION: 168+36.72
OFFSET: 11.94' L
NORTHING: 1130293.458'
EASTING: 1776034.462'
ELEVATION: 581.340'

LEGEND

F - DENOTES FIXED BEARING

DIRECTION OF TRAVEL

BORING LOCATION

EXISTING GROUND LINE
EXISTING GROUND LINE 30' LEFT
EXSITING GROUND LINE 40' RIGHT

NOTES:

1. THE WATER ELEVATION SHOWN WAS OBSERVED AT THE TIME OF SURVEY. THE ELEVATION IS FOR INFORMATION ONLY AND THE ACTUAL WATER ELEVATION DURING CONSTRUCTION MAY VARY DEPENDING ON WEATHER CONDITIONS AND SEASONAL FLUCTUATIONS.

EXISTING AND PROPOSED R/W BEYOND LIMITS OF SHEET.

VERTICAL CURVE DATA

(-)9.741% (-)0.851%
VPI = 160+50.00
ELEV. = 559.540
L.C. = 250'

(-)0.851% (+)4.444%
VPI = 163+53.00
ELEV. = 556.960
L.C. = 150'

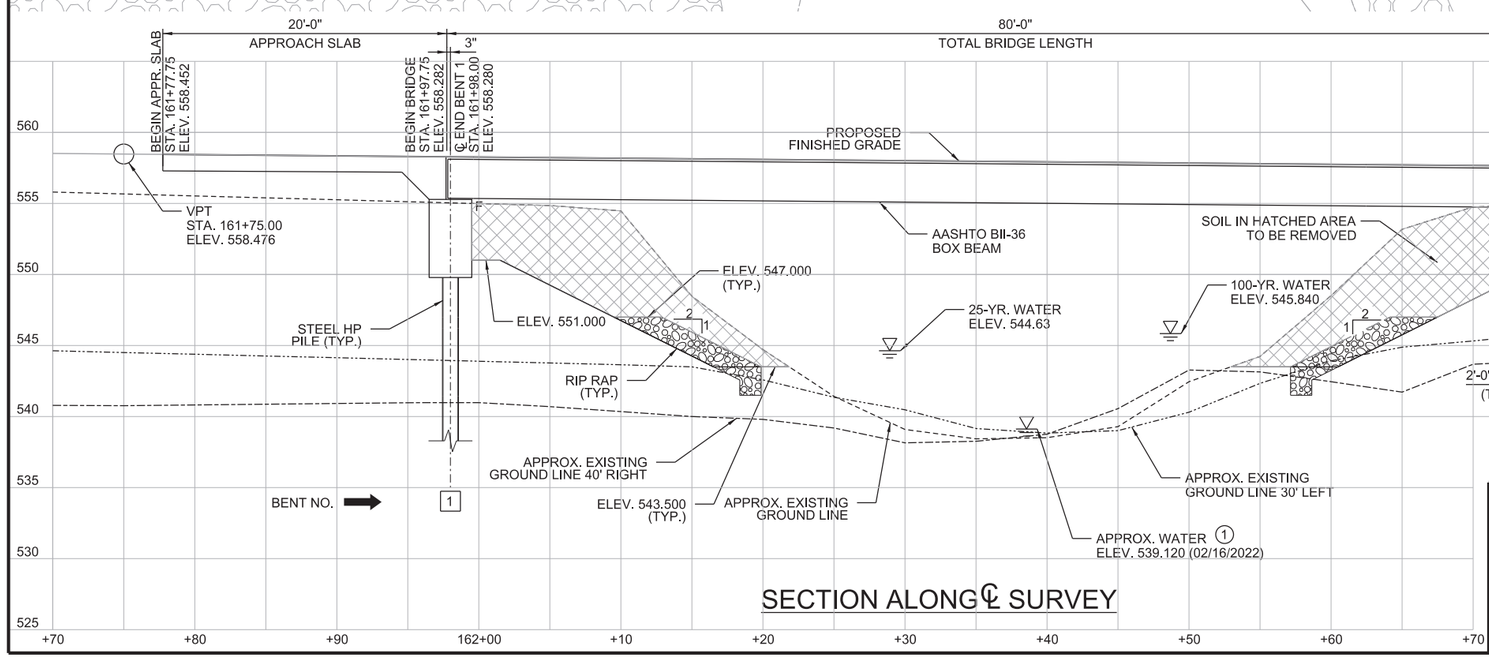

SECTION ALONG ℄ SURVEY

HYDRO DATA

D.A. = 1.6 SQ. MI.
Q_{25} = 763 CFS
$ELEV._{25}$ = 544.63' W/ 1.37' OF BACKWATER
$AREA\ FURNISHED_{25}$ = 144 SF
$VEL._{25}$ = 9.58 FPS
Q_{100} = 1,120 CFS
$ELEV._{100}$ = 545.84' W/ 1.68' OF BACKWATER
$AREA\ FURNISHED_{100}$ = 189 SF
$VEL._{100}$ = 10.35 FPS
OVERTOPPING FLOOD FLOW = N/A
OVERTOPPING FLOOD PROBABILITY = <0.2%

DAVIS & FLOYD
SINCE 1954
1319 HWY 72/221 E.
GREENWOOD, SC 29649
(864) 229-5211

SOUTH CAROLINA DEPARTMENT OF TRANSPORTATION

SOUTH CAROLINA DAVIS & FLOYD, INC. No. C00538 CERTIFICATE OF AUTHORIZATION

WORK-IN-PROGRESS NOT FOR CONSTRUCTION

CONCEPTUAL PLANS 10/24/22

REV.			
REV.			
REV.			
REVIEWED	CLM		
QUAN.			
DR.	JEB	RGS	10-22
DES.	DLH	RGS	10-22
	BY	CHK.	DATE

BRIDGE PLAN & PROFILE

COUNTY: CHEROKEE
ROUTE: S-226

SCALE: 5.333 ft / in.
PEN TABLE: G:\Resource\Standards\Bentley\Vertical\Plotting\DO_NOTHING_BRIDGES.tbl
PLOT DRIVER: G:\Resource\Standards\Bentley\Vertical\Plotting\BRIDGES.pdf MS i.pltcfg
J:\JobsEven\14034-00\Production\Structural\S-226 BRO Unnamed Stream\Drawings\014034-00_S-226_BR_02_Plan and Profile.dgn
10/20/2022

BRIDGE PLANS ID	SHEET NO.
P041150-B01	3

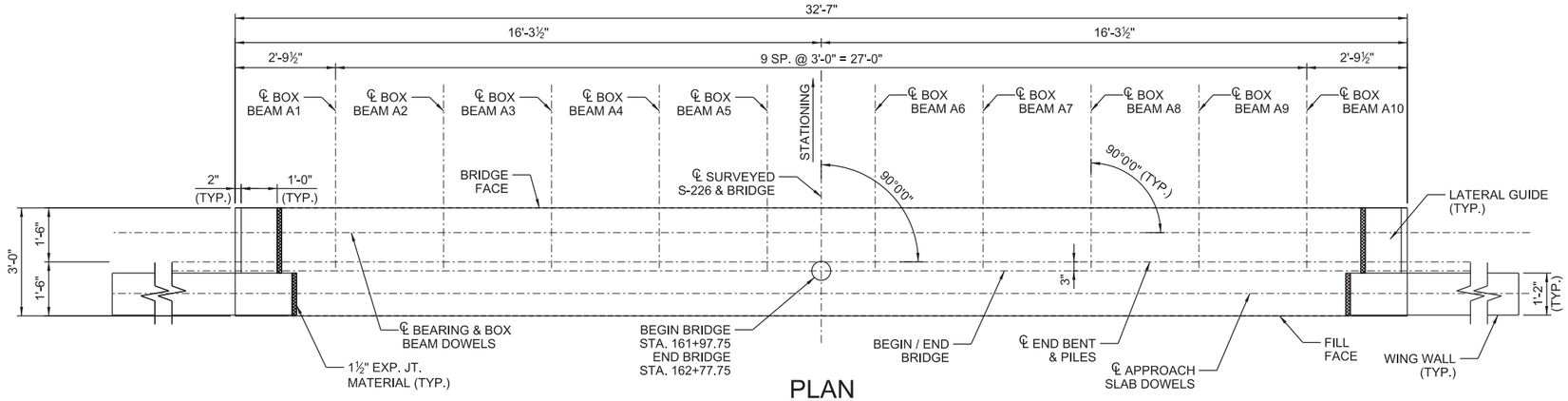

PLAN

(END BENT 1 SHOWN, END BENT 2 SIMILAR)
(PILES NOT SHOWN FOR CLARITY)

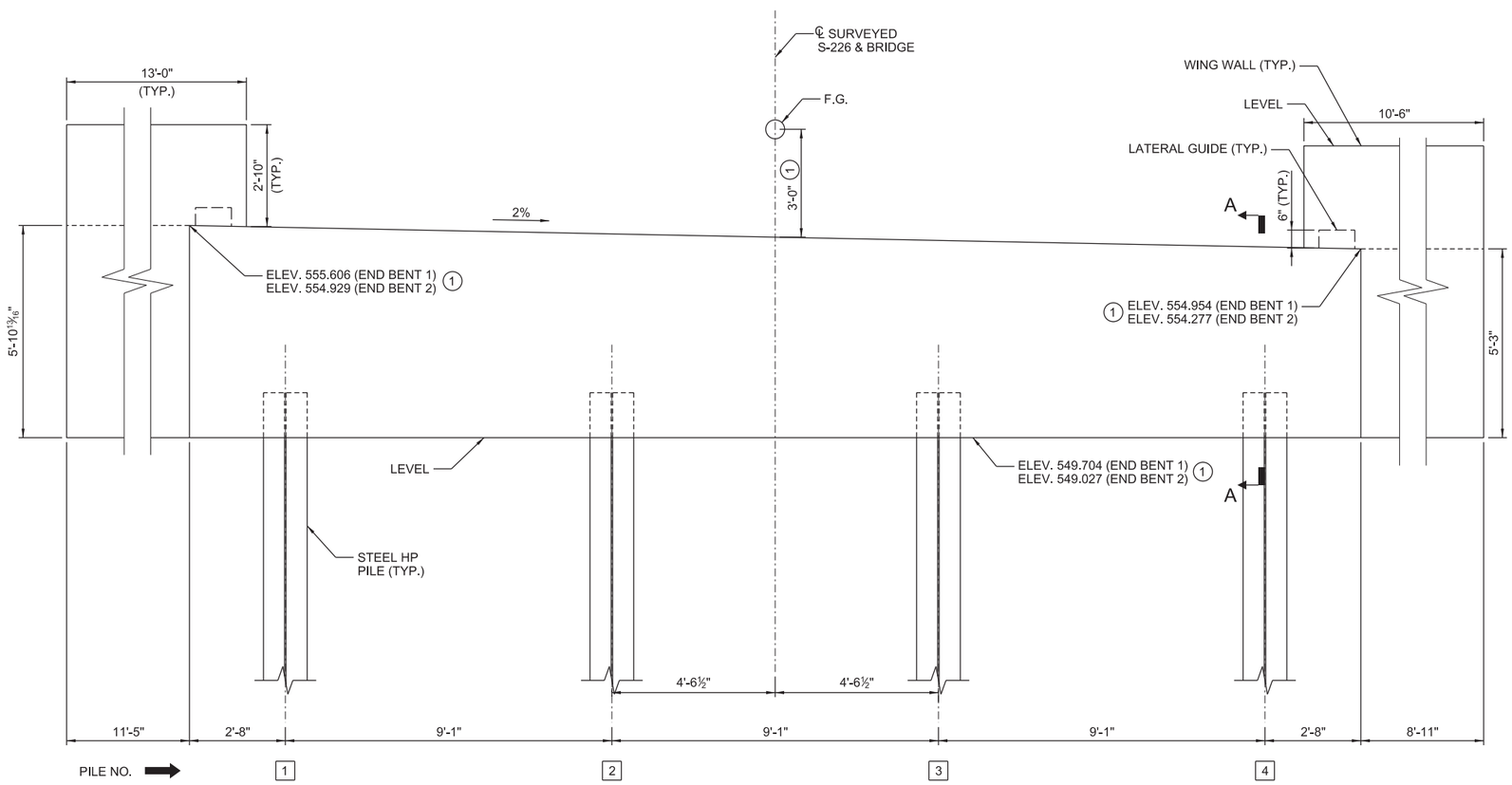

ELEVATION

(END BENT 1 SHOWN, END BENT 2 SIMILAR)
(LOOKING UPSTATION)

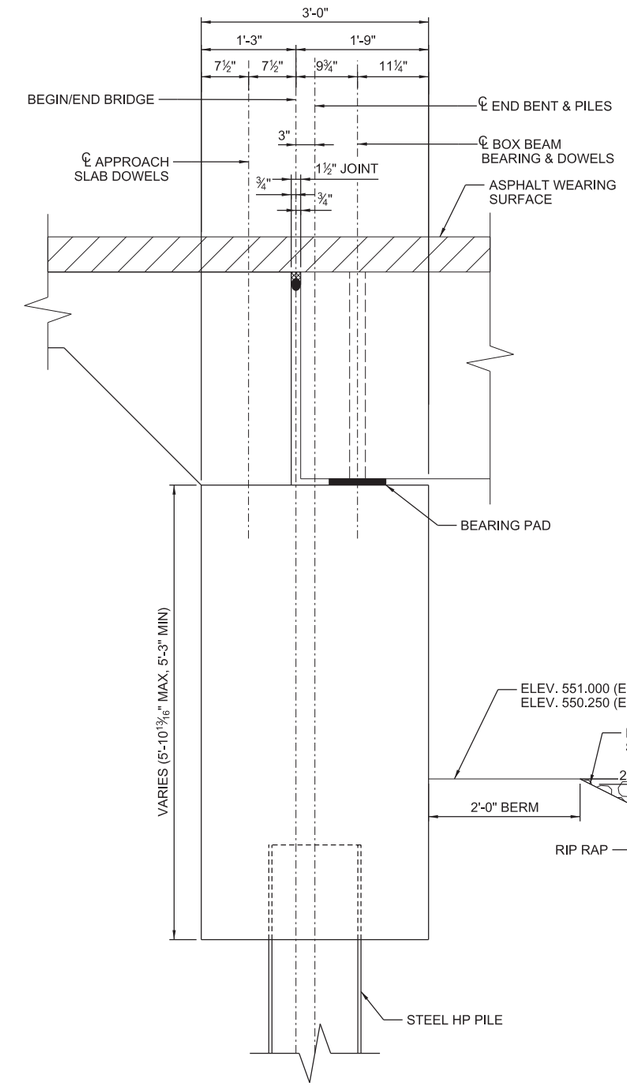

SECTION A-A

(1) DIMENSION/ELEVATION TO BE VERIFIED ONCE FINAL BEAM CAMBERS ARE DETERMINED

SOUTH CAROLINA DAVIS & FLOYD, INC. No. C00538 CERTIFICATE OF AUTHORIZATION

WORK-IN-PROGRESS
NOT FOR CONSTRUCTION

CONCEPTUAL PLANS
10/24/22

REV.			
REV.			
REV.			
REVIEWED	CLM		
QUAN.			
DR.	JEB	RGS	10-22
DES.	DLH	RGS	10-22
	BY	CHK.	DATE

DAVIS & FLOYD
SINCE 1954
1319 HWY 72/221 E.
GREENWOOD, SC 29649
(864) 229-5211

SOUTH CAROLINA
DEPARTMENT OF TRANSPORTATION

END BENT PLAN AND ELEVATION

COUNTY	ROUTE
CHEROKEE	S-226

SCALE: 2.000 ft / in.
PEN TABLE: G:\Resource\Standards\Bentley\Vertical\Plotting\DO_NOTHING_BRIDGES.tbl
PLOT DRIVER: G:\Resource\Standards\Bentley\Vertical\Plotting\BRIDGES.pdf MS i.pltcfg
FILE: J:\JobsEven\14034-00\Production\Structural\S-226 BRO Unnamed Stream\Drawings\014034-00_S-226_BR_03_End Bent Elevation.dgn
10/20/2022

BRIDGE PLANS ID	SHEET NO.
P041150-B01	4

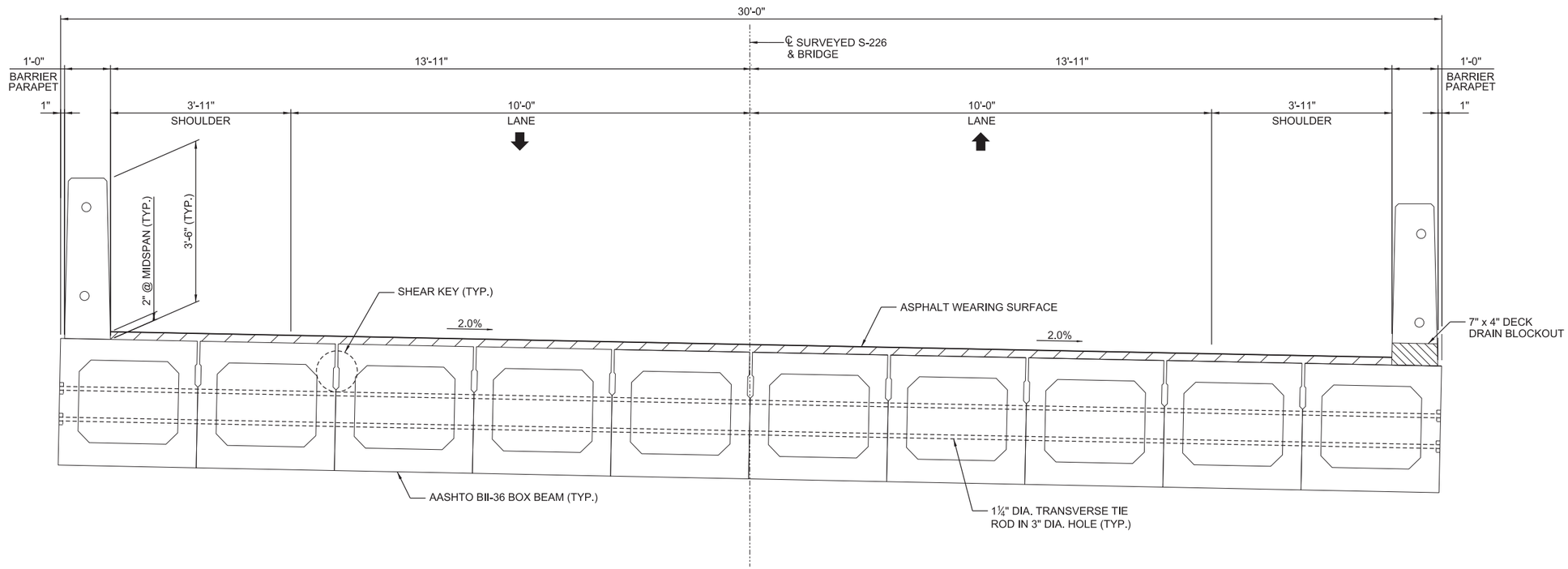

TYPICAL SECTION
(LOOKING IN DIRECTION OF STATIONING)

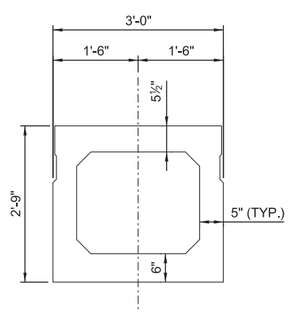

INTERIOR BOX BEAM SECTION

SCALE: 1.333 ft / in.
PEN TABLE: G:\Resource\Standards\Bentley\Vertical\Plotting\DO_NOTHING_BRIDGES.tbl
PLOT DRIVER: G:\Resource\Standards\Bentley\Vertical\Plotting\BRIDGES pdf MS i.pltcfg
FILE: J:\JobsEven\14034-00\Production\Structural\S-226 BRO Unnamed Stream\Drawings\014034-00_S-226_BR_04_Typical Section.dgn
10/20/2022

SOUTH CAROLINA DAVIS & FLOYD, INC. No. C00538 CERTIFICATE OF AUTHORIZATION

WORK-IN-PROGRESS
NOT FOR CONSTRUCTION

CONCEPTUAL
PLANS
10/24/22

REV.			
REV.			
REV.			
REVIEWED	CLM		
QUAN.			
DR.	JEB	RGS	10-22
DES.	DLH	RGS	10-22
	BY	CHK.	DATE

DAVIS & FLOYD
SINCE 1954
1319 HWY 72/221 E.
GREENWOOD, SC 29649
(864) 229-5211

SOUTH CAROLINA
DEPARTMENT OF TRANSPORTATION

TYPICAL SUPERSTRUCTURE SECTION

COUNTY	ROUTE
CHEROKEE	S-226

Appendix A.3

CPM Schedule

S-11-226 over Unnamed Stream

BRIDGE PACKAGE 14 CPM Schedule - Design Build Technical Proposal

Fri 10/21/22

ID	Lee Construction Company of the Carolinas	Duration	Start	Finish	Calendar Days	Predecessors
1	**1 DB Cherokee County, SCDOT**	**463 days**	**Thu 12/1/22**	**Fri 9/20/24**	**659**	
2	1.1 Public Announ. Of Tech. & Cost Prop. Analysis	0 days	Thu 12/1/22	Thu 12/1/22	0	
3	1.2 Award Period & Design at Risk	64 days	Thu 12/1/22	Wed 3/1/23	90	2
4	1.3 Notice To Proceed	0 days	Wed 3/1/23	Wed 3/1/23	0	3
5	1.4 Stablish & Maintain Traffic Signage of Closed Bridges	354 days	Wed 3/1/23	Thu 7/18/24	505	3
6	**1.5 Design - Build Phase**	**399 days**	**Wed 3/1/23**	**Fri 9/20/24**	**569**	**4**
7	1.5.1 Design Phase Start	0 days	Wed 3/1/23	Wed 3/1/23	0	
8	1.5.2 Design Phase Finish	0 days	Wed 12/13/23	Wed 12/13/23	0	87
9	1.5.3 Construction Start	0 days	Fri 8/11/23	Fri 8/11/23	0	4FS+115 days
10	1.5.4 Construction Finish	0 days	Fri 9/20/24	Fri 9/20/24	0	123
11	**1.5.5 Bridge S-11-138**	**236 days**	**Wed 3/1/23**	**Thu 2/1/24**	**337**	
12	**1.5.5.1 Design**	**109 days**	**Wed 3/1/23**	**Thu 8/3/23**	**155**	**7**
13	1.5.5.1.1 Preliminary Roadway,Bridge & ROW Submittal Package	60 days	Wed 3/1/23	Wed 5/24/23	84	
14	1.5.5.1.2 Final Roadway & Bridge Submittal Package	15 days	Thu 6/1/23	Thu 6/22/23	21	13FS+5 days
15	1.5.5.1.3 RFC Roadway & Bridge Submittal Package	9 days	Thu 6/29/23	Thu 7/13/23	14	14FS+5 days
16	**1.5.5.1.4 Preconstruction S-11-138**	**49 days**	**Wed 5/24/23**	**Thu 8/3/23**	**71**	
17	1.5.5.1.4.1 ROW Acquisition	10 days	Wed 5/24/23	Thu 6/8/23	15	13
18	1.5.5.1.4.2 Utility Relocations	15 days	Thu 7/13/23	Thu 8/3/23	21	15
19	1.5.5.1.4.3 Clear & Grub	5 days	Thu 7/20/23	Thu 7/27/23	7	18SS+5 days
20	1.5.5.1.4.4 Traffic Shift	1 day	Thu 7/27/23	Fri 7/28/23	1	19
21	**1.5.5.2 Construction S-11-138**	**121 days**	**Fri 8/11/23**	**Thu 2/1/24**	**174**	**9**
22	1.5.5.2.1 Bridge Demolition	10 days	Fri 8/11/23	Fri 8/25/23	14	
23	1.5.5.2.2 Shape Fills	5 days	Fri 8/25/23	Fri 9/1/23	7	22
24	1.5.5.2.3 Install Rip Rap	2 days	Fri 9/1/23	Wed 9/6/23	5	23
25	1.5.5.2.4 Drive Pile	20 days	Wed 9/6/23	Wed 10/4/23	28	24
26	1.5.5.2.5 Substructure	25 days	Wed 10/4/23	Wed 11/8/23	35	25
27	1.5.5.2.6 Superstructure	20 days	Wed 11/8/23	Wed 12/6/23	28	26
28	1.5.5.2.7 Approach Work	10 days	Wed 12/6/23	Wed 12/20/23	14	27
29	1.5.5.2.8 Roadway Slopes	15 days	Wed 12/20/23	Fri 1/12/24	23	28
30	1.5.5.2.9 Pave Road	5 days	Fri 1/12/24	Fri 1/19/24	7	29
31	1.5.5.2.10 Guardrail	2 days	Fri 1/19/24	Tue 1/23/24	4	30
32	1.5.5.2.11 Grassing	3 days	Tue 1/23/24	Fri 1/26/24	3	31
33	1.5.5.2.12 Pavement Lines	3 days	Fri 1/26/24	Wed 1/31/24	5	32
34	1.5.5.2.13 Open Road	1 day	Wed 1/31/24	Thu 2/1/24	1	33
35	**1.5.6 Bridges S-11-56 & S-11-106**	**237 days**	**Wed 4/26/23**	**Fri 3/29/24**	**338**	
36	**1.5.6.1 Design**	**127 days**	**Wed 4/26/23**	**Wed 10/25/23**	**182**	
37	1.5.6.1.1 Preliminary Roadway,Bridge & ROW Submittal Package S-11-56	60 days	Wed 4/26/23	Fri 7/21/23	86	13SS+40 days
38	1.5.6.1.2 Final Roadway & Bridge Submittal Package S-11-56	15 days	Fri 7/28/23	Fri 8/18/23	21	37FS+5 days
39	1.5.6.1.3 RFC Roadway & Bridge Submittal Package S-11-56	9 days	Fri 8/25/23	Fri 9/8/23	14	38FS+5 days
40	1.5.6.1.4 Preliminary Roadway,Bridge & ROW Submittal Package S-11-106	60 days	Fri 5/26/23	Tue 8/22/23	88	37SS+22 days
41	1.5.6.1.5 Final Roadway & Bridge Submittal Package S-11-106	15 days	Tue 8/29/23	Wed 9/20/23	22	40FS+5 days
42	1.5.6.1.6 RFC Roadway & Bridge Submittal Package S-11-106	9 days	Wed 9/27/23	Tue 10/10/23	13	41FS+5 days
43	**1.5.6.1.7 Preconstruction**	**67 days**	**Fri 7/21/23**	**Wed 10/25/23**	**96**	

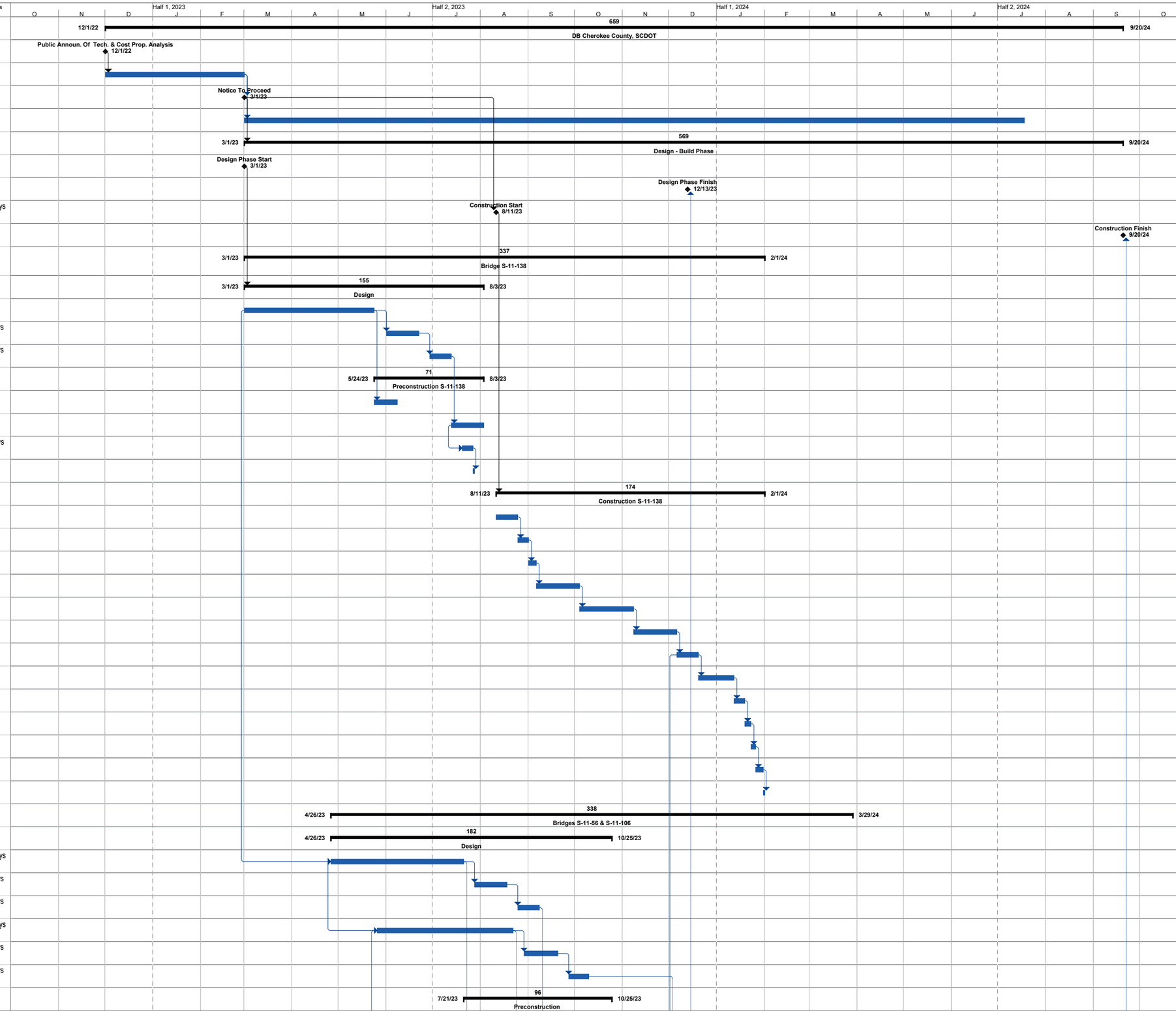

BRIDGE PACKAGE 14 CPM Schedule - Design Build Technical Proposal

ID	Lee Construction Company of the Carolinas	Duration	Start	Finish	Calendar Days	Predecessors
44	1.5.6.1.7.1 ROW Acquisition S-11-56	10 days	Fri 7/21/23	Fri 8/4/23	14	37
45	1.5.6.1.7.2 Utility Relocation S-11-56	15 days	Fri 8/4/23	Fri 8/25/23	21	44
46	1.5.6.1.7.3 Clear & Grub S-11-56	5 days	Fri 8/11/23	Fri 8/18/23	7	45SS+5 days
47	1.5.6.1.7.4 Traffic Shift S-11-56	1 day	Fri 8/18/23	Mon 8/21/23	3	46
48	1.5.6.1.7.5 ROW Acquisition S-11-106	10 days	Tue 8/22/23	Wed 9/6/23	15	40
49	1.5.6.1.7.6 Clear & Grub S-11-106	10 days	Wed 9/6/23	Wed 9/20/23	14	48
50	1.5.6.1.7.7 Utility Relocation S-11-106	25 days	Wed 9/20/23	Wed 10/25/23	35	49
51	**1.5.6.2 Construction S-11-56**	**83 days**	**Fri 9/8/23**	**Fri 1/5/24**	**119**	**39**
52	1.5.6.2.1 Bridge Demolition	5 days	Fri 9/8/23	Fri 9/15/23	7	
53	1.5.6.2.2 Shape Fills	5 days	Fri 9/15/23	Fri 9/22/23	7	52
54	1.5.6.2.3 Install Rip Rap	2 days	Fri 9/22/23	Tue 9/26/23	4	53
55	1.5.6.2.4 Drive Pile	10 days	Tue 9/26/23	Tue 10/10/23	14	54
56	1.5.6.2.5 Substructure	14 days	Tue 10/10/23	Mon 10/30/23	20	55
57	1.5.6.2.6 Superstructure	15 days	Mon 10/30/23	Mon 11/20/23	21	56
58	1.5.6.2.7 Approach Work	10 days	Mon 11/20/23	Mon 12/4/23	14	57
59	1.5.6.2.8 Roadway Slopes	10 days	Mon 12/4/23	Mon 12/18/23	14	58
60	1.5.6.2.9 Paving	5 days	Mon 12/18/23	Tue 12/26/23	8	59
61	1.5.6.2.10 Guardrail	2 days	Tue 12/26/23	Thu 12/28/23	2	60
62	1.5.6.2.11 Grassing	3 days	Thu 12/28/23	Wed 1/3/24	6	61
63	1.5.6.2.12 Pavement Lines	1 day	Wed 1/3/24	Thu 1/4/24	1	62
64	1.5.6.2.13 Open Road	1 day	Thu 1/4/24	Fri 1/5/24	1	63
65	**1.5.6.3 Construction S-11-106**	**82 days**	**Mon 12/4/23**	**Fri 3/29/24**	**116**	**42,58**
66	1.5.6.3.1 Bridge Demolition	5 days	Mon 12/4/23	Mon 12/11/23	7	
67	1.5.6.3.2 Shape Fills	5 days	Mon 12/11/23	Mon 12/18/23	7	66
68	1.5.6.3.3 Install Rip Rap	2 days	Mon 12/18/23	Wed 12/20/23	2	67
69	1.5.6.3.4 Drive Pile	10 days	Wed 12/20/23	Fri 1/5/24	16	68
70	1.5.6.3.5 Substructure	15 days	Fri 1/5/24	Fri 1/26/24	21	69
71	1.5.6.3.6 Superstructure	15 days	Fri 1/26/24	Fri 2/16/24	21	70
72	1.5.6.3.7 Approach Work	10 days	Fri 2/16/24	Fri 3/1/24	14	71
73	1.5.6.3.8 Roadway Slopes	5 days	Fri 3/1/24	Fri 3/8/24	7	72
74	1.5.6.3.9 Complete Bridge	5 days	Fri 3/8/24	Fri 3/15/24	7	73
75	1.5.6.3.10 Paving	4 days	Fri 3/15/24	Thu 3/21/24	6	74
76	1.5.6.3.11 Guardrail	2 days	Thu 3/21/24	Mon 3/25/24	4	75
77	1.5.6.3.12 Grassing	2 days	Mon 3/25/24	Wed 3/27/24	2	76
78	1.5.6.3.13 Pavement Lines	1 day	Wed 3/27/24	Thu 3/28/24	1	77
79	1.5.6.3.14 Open Road	1 day	Thu 3/28/24	Fri 3/29/24	1	78
80	**1.5.7 Bridges S-11-226 & S-11-86**	**337 days**	**Fri 5/26/23**	**Fri 9/20/24**	**483**	
81	**1.5.7.1 Design**	**142 days**	**Fri 5/26/23**	**Fri 12/15/23**	**203**	
82	1.5.7.1.1 Preliminary Roadway,Bridge & ROW Submittal Package S-11-226	60 days	Fri 5/26/23	Tue 8/22/23	88	40SS
83	1.5.7.1.2 Final Roadway & Bridge Submittal Package S-11-226	15 days	Tue 8/29/23	Wed 9/20/23	22	82FS+5 days
84	1.5.7.1.3 RFC Roadway & Bridge Submittal Package S-11-226	9 days	Wed 9/27/23	Tue 10/10/23	13	83FS+5 days
85	1.5.7.1.4 Preliminary Roadway,Bridge & ROW Submittal Package S-11-86	65 days	Tue 7/25/23	Wed 10/25/23	92	82SS+40 days
86	1.5.7.1.5 Final Roadway & Bridge Submittal Package S-11-86	15 days	Wed 11/1/23	Wed 11/22/23	21	85FS+5 days

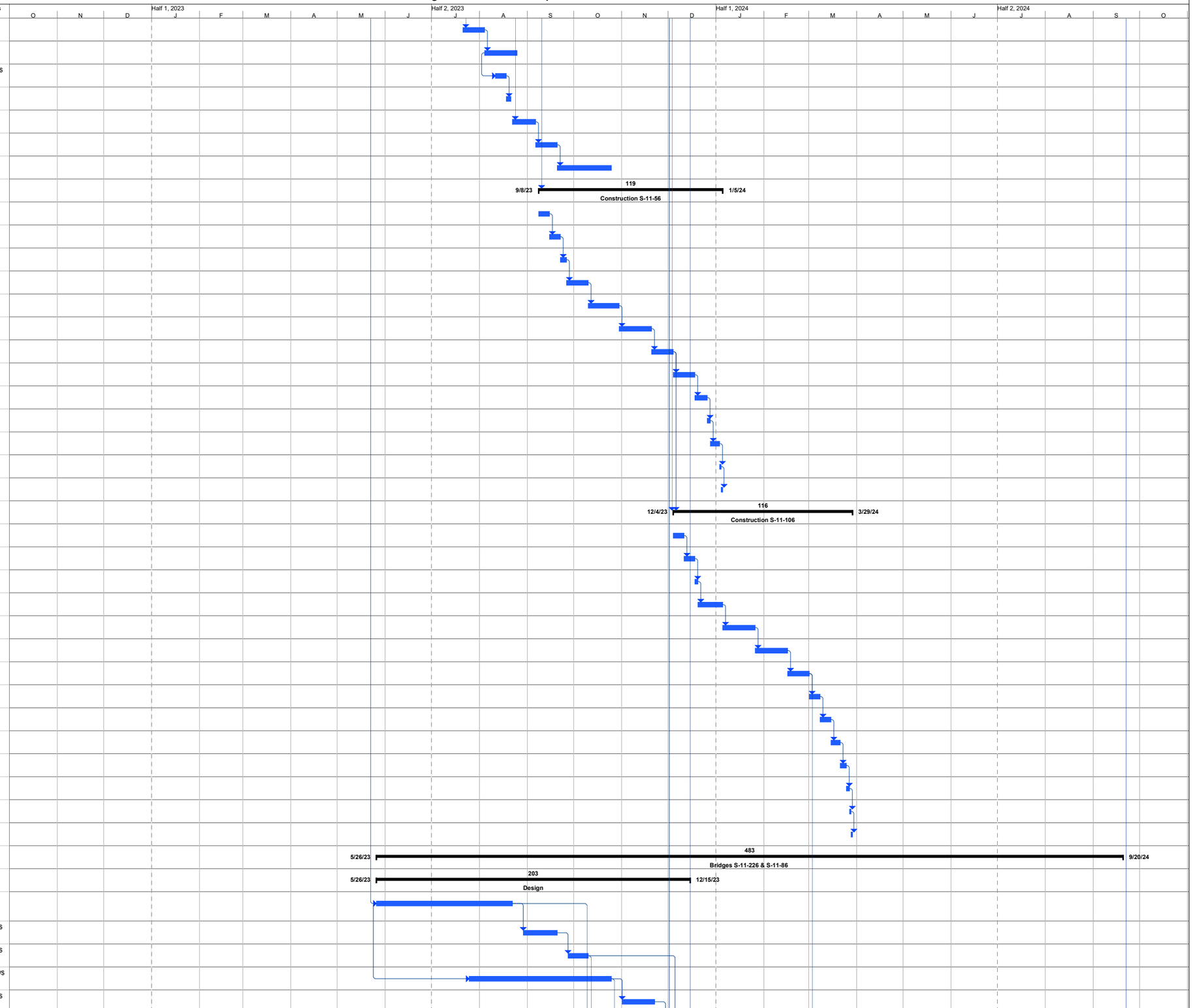

BRIDGE PACKAGE 14 CPM Schedule - Design Build Technical Proposal

ID	Lee Construction Company of the Carolinas	Duration	Start	Finish	Calendar Days	Predecessors
87	1.5.7.1.6 RFC Roadway & Bridge Submittal Package S-11-86	10 days	Wed 11/29/23	Wed 12/13/23	14	86FS+5 days
88	**1.5.7.1.7 Preconstruction**	**48 days**	**Tue 10/10/23**	**Fri 12/15/23**	**66**	**82**
89	1.5.7.1.7.1 ROW Acquisition S-11-226	10 days	Tue 10/10/23	Tue 10/24/23	14	84
90	1.5.7.1.7.2 Utility Relocation S-11-226	5 days	Tue 10/24/23	Tue 10/31/23	7	89
91	1.5.7.1.7.3 Clear & Grub S-11-226	5 days	Tue 10/24/23	Tue 10/31/23	7	90SS
92	1.5.7.1.7.4 Notice of Closure	21 days	Mon 11/6/23	Tue 12/5/23	29	97FS-23 days
93	1.5.7.1.7.5 Utility Relocation S-11-86	25 days	Wed 10/25/23	Wed 11/29/23	35	85
94	1.5.7.1.7.6 Clear & Grub S-11-86	11 days	Wed 11/29/23	Thu 12/14/23	15	93
95	1.5.7.1.7.7 Traffic Shift S-11-86	1 day	Thu 12/14/23	Fri 12/15/23	1	94
96	**1.5.7.2 Construction S-11-226**	**110 days**	**Wed 12/6/23**	**Fri 5/10/24**	**156**	**84,28SS**
97	1.5.7.2.1 Traffic Shift	1 day	Wed 12/6/23	Thu 12/7/23	1	
98	1.5.7.2.2 Bridge Demolition	15 days	Thu 12/7/23	Fri 12/29/23	22	97
99	1.5.7.2.3 Shape Fills	5 days	Fri 12/29/23	Mon 1/8/24	10	98
100	1.5.7.2.4 Install Rip Rap	2 days	Mon 1/8/24	Wed 1/10/24	2	99
101	1.5.7.2.5 Drive Pile	10 days	Wed 1/10/24	Wed 1/24/24	14	100
102	1.5.7.2.6 Substructure	20 days	Wed 1/24/24	Wed 2/21/24	28	101
103	1.5.7.2.7 Superstructure	20 days	Wed 2/21/24	Wed 3/20/24	28	102
104	1.5.7.2.8 Approach Work	10 days	Wed 3/20/24	Wed 4/3/24	14	103
105	1.5.7.2.9 Roadway Slopes	15 days	Wed 4/3/24	Wed 4/24/24	21	104
106	1.5.7.2.10 Paving	5 days	Wed 4/24/24	Wed 5/1/24	7	105
107	1.5.7.2.11 Guardrail	2 days	Wed 5/1/24	Fri 5/3/24	2	106
108	1.5.7.2.12 Grassing	3 days	Fri 5/3/24	Wed 5/8/24	5	107
109	1.5.7.2.13 Pavement Lines	1 day	Wed 5/8/24	Thu 5/9/24	1	108
110	1.5.7.2.14 Open Road	1 day	Thu 5/9/24	Fri 5/10/24	1	109
111	**1.5.7.3 Construction S-11-86**	**142 days**	**Fri 3/1/24**	**Fri 9/20/24**	**203**	**87,72**
112	1.5.7.3.1 Bridge Demolition	20 days	Fri 3/1/24	Fri 3/29/24	28	
113	1.5.7.3.2 Shape Fills	5 days	Fri 3/29/24	Fri 4/5/24	7	112
114	1.5.7.3.3 Install Rip Rap	3 days	Fri 4/5/24	Wed 4/10/24	5	113
115	1.5.7.3.4 Drive Pile	20 days	Wed 4/10/24	Wed 5/8/24	28	114
116	1.5.7.3.5 Substructure	30 days	Wed 5/8/24	Thu 6/20/24	43	115
117	1.5.7.3.6 Superstructure	40 days	Thu 6/20/24	Fri 8/16/24	57	116
118	1.5.7.3.7 Roadway Slopes	10 days	Fri 8/16/24	Fri 8/30/24	14	117
119	1.5.7.3.8 Paving	5 days	Fri 8/30/24	Mon 9/9/24	10	118
120	1.5.7.3.9 Guardrail	3 days	Mon 9/9/24	Thu 9/12/24	3	119
121	1.5.7.3.10 Grassing	3 days	Thu 9/12/24	Tue 9/17/24	5	120
122	1.5.7.3.11 Pavement Lines	2 days	Tue 9/17/24	Thu 9/19/24	2	121
123	1.5.7.3.12 Open Road	1 day	Thu 9/19/24	Fri 9/20/24	1	122

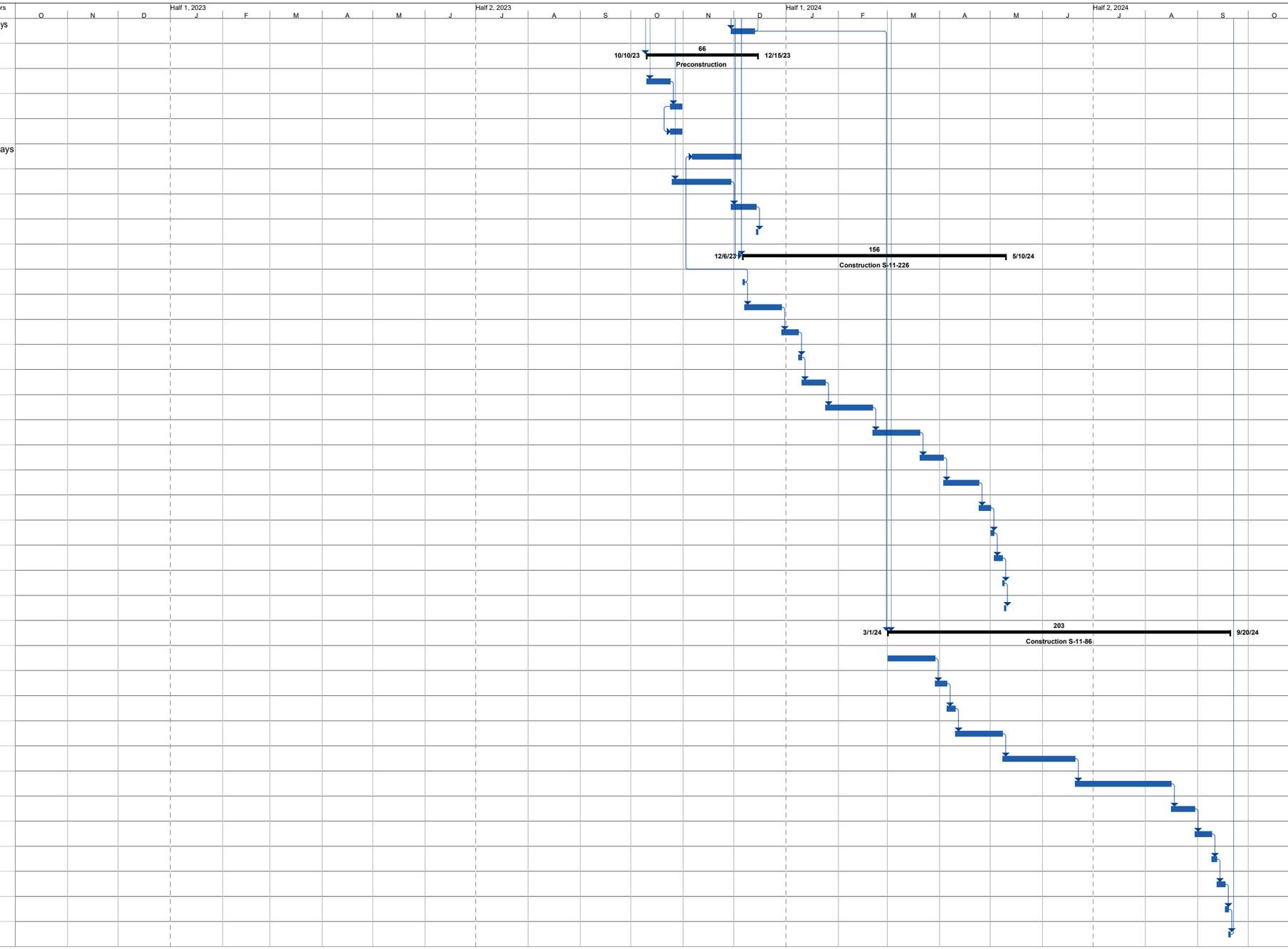

Appendix B

Required Forms, and Confidential and Proprietary Information Page List

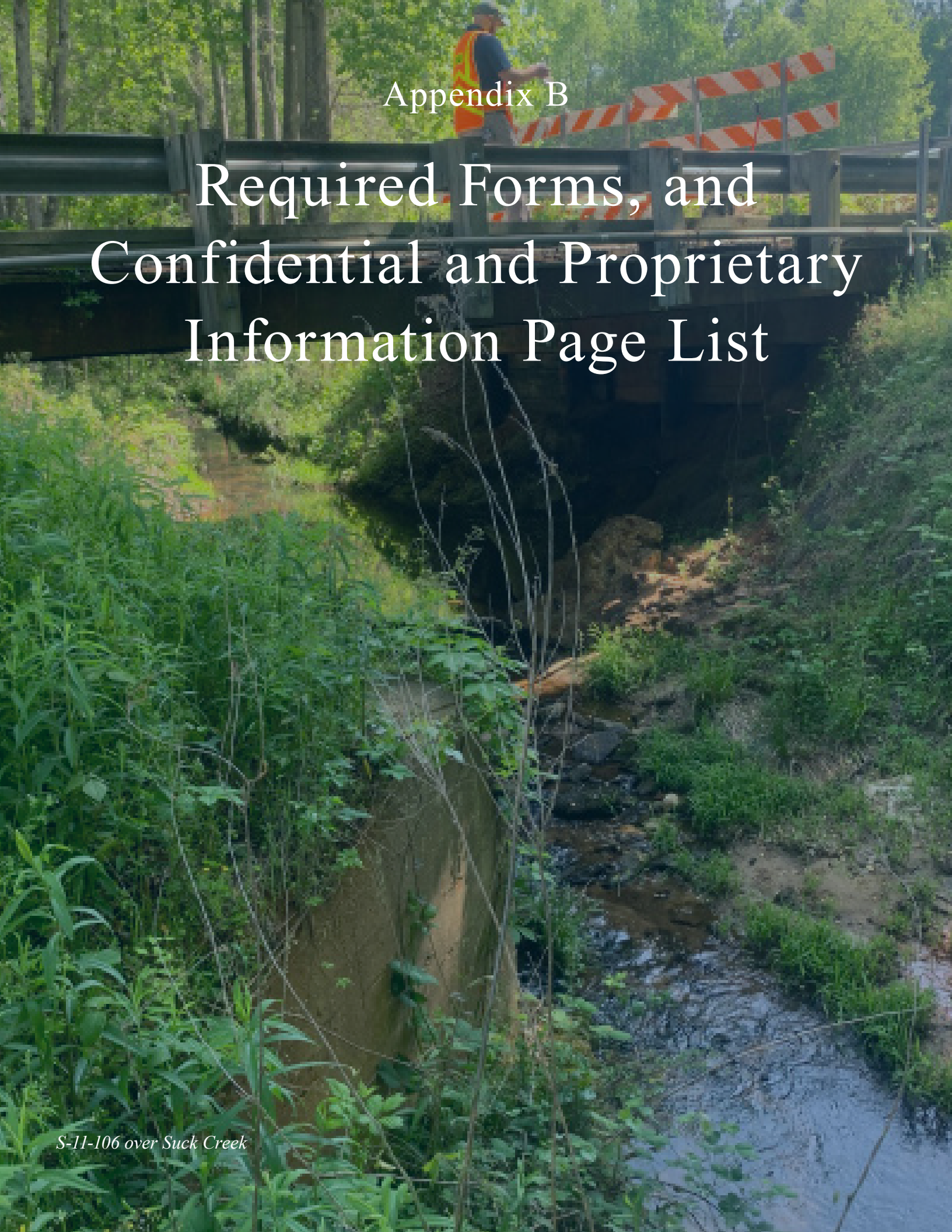

S-11-106 over Suck Creek

12. STIPEND ACKNOWLEDGEMENT FORM

Stipend Acknowledgement Form

Bridge Package 14
Cherokee County

Proposer: Lee Construction Company of the Carolinas, Inc.

ADDRESS: 633 Eagleton Downs Drive, Pineville, NC 28134

The undersigned Proposer, hereby:

☐ Waives the stipend for this Project.

☒ Accepts the stipend for this Project.

By accepting the stipend for this Project, Proposer agrees:

1) to execute and include the Stipend Agreement in Article XIII of the RFP with its RFP response;

2) to submit an invoice with FEIN number for the stipend amount to the SCDOT POC after SCDOT's posting of the Notice of Award on SCDOT's Design-Build Website.;

3) to transfer all rights to its Work Product used to develop the Proposal as of the date of this acknowledgement. "Work Product" " means all submittals, including ATCs, ideas, innovations, solutions, methods, processes, design concepts, materials, electronic files, marked up drawings, cross sections, quantity lists and intellectual property, made by Proposer during the RFP process, including the Proposal, exchange of information during the pre-Proposal and post-Proposal period.

SCDOT will pay the stipend to each eligible unsuccessful Proposer, who has signed a Stipend Agreement, within ninety (90) days after execution of the Contract or the decision to not award a contract.

10/24/2022 — Date

Lee Construction Company of the Carolinas, Inc. — Proposer

Ronald P. Shaw — Print Name

13. STIPEND AGREEMENT

STIPEND AGREEMENT
Project ID: 1162220
Bridge Package 14
Cherokee County

THIS STIPEND AGREEMENT (the "Agreement") is made and entered into as of the 24th day of October, 2022, by and between the SOUTH CAROLINA DEPARTMENT OF TRANSPORTATION (hereinafter "SCDOT"), and Lee Construction Company of the Carolinas,Inc., ("Proposer"), with reference to the following facts:

SCDOT issued a Request for Proposal ("RFP") for design and construction of the above-referenced Design-Build Project ("Project"), pursuant to procurement authority granted in Section 57-5-1625 of the S.C. Code of Laws, 1976, as amended. The RFP provided for payment of stipends as provided herein. Capitalized terms used, but not defined, have the meanings ascribed in the RFP.

NOW, THEREFORE, Proposer hereby agrees as follows:

1. Work Product.

1.1 Proposer shall prepare and submit a responsible and responsive Technical Proposal and Cost Proposal that conforms in all material respects to the requirements and provisions of the RFP, as determined by SCDOT, and are timely received by SCDOT in accordance with the RFP Milestone Schedule.

1.2 By signing this Stipend Agreement, Proposer agrees to transfer full and complete ownership to SCDOT of all Work Product. The Work Product (as defined below) shall become the property of SCDOT without restriction or limitation on its use, without further compensation or consideration, and can be used in connection with this Project or any future projects by SCDOT. Neither Proposer nor any of its team members shall copyright any of the material developed under this Agreement.

1.3 The term "Work Product" shall mean the Proposal and all material, electronic files, marked up drawings, cross sections, quantity lists, submittals, alternative technical concepts (ATC), ideas, innovations, solutions, methods, processes, design concepts, Trade Secrets or confidential information, and intellectual property, made by or produced for Proposer in the development and submission of the Technical and Cost Proposal, including exchanges of information during the pre-Proposal and post-Proposal period.

2. Compensation and Payment.

2.1 A stipend to Proposer for the Work Product described herein shall be $25,000.00 and is payable to Proposer that was determined to be responsible and (1) submitted a responsive Technical Proposal and responsive Cost Proposal to the RFP which is not selected for award of this Project, or (2) was awarded the Contract but the Contract was terminated by SCDOT for convenience after the Submittal of Proposal Due Date (See Final RFP Milestone schedule) but prior to the Notice to Proceed #1. Responsibility of Proposers and responsiveness of the Technical Proposal and Cost Proposal will be determined by SCDOT as a condition of payment.

2.2 SCDOT will pay the stipend to Proposer as follows, subject (as applicable) to the following conditions:

(a) Proposer has submitted this signed Stipend Agreement, unchanged with its response to the RFP.

(b) After posting of the Notice of Award on SCDOT's Design-Build Website, Proposer has submitted to SCDOT an invoice, with FEIN Number, for the Stipend amount.

(c) After execution of the Contract or the decision not to award a contract, SCDOT will pay the invoice for the stipend amount to the unsuccessful Proposer meeting the criteria of Section 2.1 within 90 calendar days of receipt of the invoice from Proposer.

(d) If the procurement is suspended or cancelled prior to the Proposal Due Date (see FINAL RFP Milestone schedule), no stipend will be paid to Proposer.

(e) After the submittal of Proposals, but prior to award, if the procurement is cancelled, all Proposers that provide a responsive Technical Proposal and Cost Proposal to the final RFP and submitted a signed Stipend Agreement with their RFP shall receive the stipend

(f) In the event of a Best and Final Offer, only one stipend will be paid to each Proposer that executed a Stipend Agreement and met the other criteria and conditions herein.

(g) No stipends will be paid for submitting RFQ responses.

(h) No stipends will be paid to a Proposer who withdraws at any time from this procurement.

2.3 Acceptance by the Proposer of payment of the stipend amount from SCDOT shall constitute a waiver by Proposer of any and all right, equitable or otherwise, to bring any claim in connection with this procurement, procurement process, award of the Contract, or cancellation of this procurement.

2.4 The Proposer awarded the contract shall be not eligible to receive a stipend.

2.5 If Proposer elects to waive payment of the stipend, SCDOT will not use the ideas or information contained in that Proposer's Proposal for this Project. However, the Proposer's Proposal will be subject to the South Carolina Freedom of Information Act.

3. Indemnities.

3.1 Subject to the limitations contained in Section 3.2, Proposer shall indemnify, protect and hold harmless SCDOT and its directors, officers, employees and contractors from, and Proposer shall defend at its own expense, all claims, costs, expenses, liabilities, demands, or suits at law or equity arising, in whole or in part, from the negligence or willful misconduct of Proposer or any of its agents, officers, employees, representatives or subcontractors or breach of any of Proposer's obligations under this Agreement.

3.2 This indemnity shall not apply with respect to any claims, demands or suits arising from use of the Work Product by SCDOT.

4. Compliance With Laws.

4.1 Proposer shall comply with all federal, state, and local laws, ordinances, rules, and regulations applicable to the work performed or paid for under this Agreement and covenants and agrees that it and its employees shall be bound by the standards of conduct provided in applicable laws, ordinances, rules, and regulations as they relate to work performed under this Agreement. Proposer agrees to incorporate the provisions of this paragraph in any subcontract into which it might enter with reference to the work performed pursuant to this Agreement.

4.2 The Proposer agrees (a) not to discriminate in any manner against an employee or applicant for employment because of race, color, religion, creed, age, sex, marital status, national origin, ancestry or disability of a qualified individual with a disability; (b) to include a provision similar to that contained in subsection (a) in any subcontract; and (c) to post and to cause subcontractors to post in conspicuous places available to employees and applicants for employment, notices setting forth the substance of this clause.

5. Assignment.

Proposer shall not assign this Agreement without SCDOT's prior written consent. Any assignment of this Agreement without such consent shall be null and void.

6. Miscellaneous.

6.1 Proposer and SCDOT agree that Proposer, its team members, and their respective employees are not agents of SCDOT as a result of this Agreement.

6.2 This Agreement, together with the RFP, as amended from time to time, the provisions of which are incorporated herein by reference, embodies the entire agreement of the parties. There are no promises, terms, conditions, or obligations other than those contained herein or in the RFP, and this Agreement shall supersede all previous communications, representation, or agreements, either oral or written, between the parties hereto.

6.3 It is understood and agreed by the parties hereto that if any part, term, or provision of this Agreement is by the courts held to be illegal or in conflict with any law of the State of South Carolina, the validity of the remaining portions or provisions shall not be affected, and the rights and obligations of the parties shall be construed and enforced as if the Agreement did not contain the particular part, term, or provisions to be invalid.

6.4 This Agreement shall be governed by and construed in accordance with the laws of the State of South Carolina.

IN WITNESS WHEREOF, the parties have executed this Agreement as of the date first written above.

Witness:

_____

Recommended:

_____
{INSERT NAME}
Alternative Delivery Program Manager

Witness:

_____
Nelson Reyes

SOUTH CAROLINA DEPARTMENT
OF TRANSPORATION

By: _____
{INSERT NAME}
Alternative Delivery Engineer

Proposer

Lee Construction Company of the Carolinas, Inc.
Name of Proposer

By: _____
Ronald P. Shaw

Its: President

11. EQUAL EMPLOYMENT OPPORTUNITY CERTIFICATION

(COMPLETE THIS SECTION FOR FEDERAL PROJECTS ONLY)
EQUAL EMPLOYMENT OPPORTUNITY PERFORMANCE

Select the Certification that applies to the PROPOSER:

Certification (1) [X] or Certification (2) [ ]

Select the appropriate responses in the applicable Certification:

Certification (1): Pursuant to 41 C.F.R. §60-1.7(b)(1), Previous Equal Employment Opportunity Performance Certification, as the Prospective Prime Contractor, I HEREBY CERTIFY THAT I:

(a) **(HAVE / HAVE NOT)** developed and filed an Affirmative Action Program pursuant to 41C.F.R. §60-2 and/or 60-4;

(b) **(HAVE / HAVE NOT)** participated in a previous contract or subcontract subject to the equal opportunity clause;

(c) **(HAVE / HAVE NOT)** filed with the Joint Reporting Committee, the Director of Office of Federal Contract Compliance, or the Equal Employment Opportunity Commission, all reports due under the applicable filing requirements,

OR

Certification (2): I, HEREBY CERTIFY that as the Prospective Prime Contractor submitting this Proposal, **(CLAIM / DO NOT CLAIM)** exemption from the submission of the Standard Form 100 (EEO-1) due to the fact that it employs a total of less than fifty (50) employees under C.F.R. §60-1.7, or qualifies for an exempted status under 41 C.F.R. §60-1.5.

I FURTHER CERTIFY that the above Certification will be made part of any Subcontract Agreement, or other agreement involved with this project.

Executed on 10/24, 20 22 .

Signed: _____
(Officer/PROPOSER)

Title: President, Ronald P. Shaw

Company: Lee Construction Company of the Carolinas,Inc.

Address: 633 Eagleton Downs Drive, Pineville, NC 28134

Note: The above certification is required by the Equal Employment Opportunity Regulations of the Secretary of Labor (41 CFR 60-1.7(b)(1)), and must be submitted by PROPOSERS only in connection with contracts which are subject to the equal opportunity clause. Contracts that are exempt from the equal opportunity clause are set forth in 41 CFR 60-1.5. (Generally, only contracts of $10,000 or under are exempt.)

Currently, Standard Form 100 (EEO-1) is the only report required by Executive Orders or their implementing regulations.

Proposers, Primary Members, or proposed Subcontractors (any tier) and Consultants who have participated in a previous contract subject to the Executive Orders and have not filed the required reports shall note that 41 CFR 60-1.7(b)(1) prevents the award of contracts and subcontracts unless such contractor submits a report covering the delinquent period or such other period specified by the Federal Highway Administration or by the Director, Office of Federal Contract Compliance, U.S. Department of Labor.

10. NON-COLLUSION CERTIFICATION

NON-COLLUSION CERTIFICATION

Project ID: 1162220

IN ACCORDANCE WITH THE PROVISIONS OF S.C. CODE ANN. §§ 39-3-10 ET.SEQ., 39-5-10 ET. SEQ., 15 U.S.C. §45; 23 C.F.R. §635.112(F); AND 28 U.S.C. §1746, I HEREBY ACKNOWLEDGE THAT I AM AN OFFICER OF THE PROPOSER FIRM AND, UNDER PENALTY OF PERJURY UNDER THE LAWS OF THE UNITED STATES AND SOUTH CAROLINA, DECLARE, BY MY CERTIFICATION BELOW, THAT THE FOLLOWING IS TRUE AND CORRECT, AND FURTHER, THAT THIS JOINT-VENTURE, FIRM, PARTNERSHIP, ASSOCIATION OR CORPORATION, OR ANY OTHER LEGAL ENTITY HAS NOT, EITHER DIRECTLY OR INDIRECTLY, ENTERED INTO ANY AGREEMENT, PARTICIPATED IN ANY COLLUSION, OR OTHERWISE TAKEN ANY ACTION IN RESTRAINT OF FREE COMPETITIVE BIDDING IN CONNECTION WITH THE SUBMISSION OF A BID PROPOSAL ON THE ABOVE REFERENCED PROJECT.

BY CHECKING THIS BOX [X], I CERTIFY THAT I HAVE READ, UNDERSTAND, ACCEPT, AND ACKNOWLEDGE ALL OF THE ABOVE STATEMENTS.

Executed on 10/24/2022
(Date)

Signed: Ronald P. Shaw
Ronald P. Shaw (Officer/Proposer)

President
(Title)

633 Eagleton Downs Drive
(Address)

Pineville, NC 28134

South Carolina
Department of Transportation

NOTICE OF RECEIPT

Bridge Package 14
Design-Build – Contract ID 1162220
Cherokee County

Addendum 1

The information in this addendum shall be made part of the contract documents. PROPOSERS are instructed to incorporate the information into the previously provided RFP documents.

PROPOSERS are required to sign this document and enclose it with their Technical Proposal. Receipt of this signed document by The South Carolina Department of Transportation serves as confirmation that the PROPOSER has received and incorporated this Addendum into the contract documents.

Confirmation Statement:

I, the PROPOSER confirm that I have received this addendum package and have incorporated the information provided in the addendum into the contract documents.

PROPOSER's Signature

10/24/2022
Date

Ronald P. Shaw
Printed Name

For: Lee Construction Company of the Carolinas, Inc., and Davis & Floyd, Inc.
Design-Build Team Name

Post Office Box 191
Columbia, South Carolina 29202-0191
Phone: (803) 737-2314
TTY: (803) 737-3870
AN EQUAL OPPORTUNITY
AFFIRMATIVE ACTION EMPLOYER

South Carolina
Department of Transportation

NOTICE OF RECEIPT

Bridge Package 14
Design-Build – Contract ID 1162220
Cherokee County

Addendum 2

The information in this addendum shall be made part of the contract documents. PROPOSERS are instructed to incorporate the information into the previously provided RFP documents.

PROPOSERS are required to sign this document and enclose it with their Technical Proposal. Receipt of this signed document by The South Carolina Department of Transportation serves as confirmation that the PROPOSER has received and incorporated this Addendum into the contract documents.

Confirmation Statement:

I, the PROPOSER confirm that I have received this addendum package and have incorporated the information provided in the addendum into the contract documents.

PROPOSER's Signature

10/24/2022
Date

Ronald P. Shaw
Printed Name

For: Lee Construction Company of the Carolinas, Inc. and Davis & Floyd, Inc.
Design-Build Team Name

Post Office Box 191
Columbia, South Carolina 29202-0191
Phone: (803) 737-2314
TTY: (803) 737-3870
AN EQUAL OPPORTUNITY
AFFIRMATIVE ACTION EMPLOYER

SCDOT®

STAKEHOLDERS
UTILITIES
PERMITTING AGENCIES

PROJECT MANAGER

RONALD PAUL SHAW (LEE)

EXECUTIVE COMMITTEE

Lee, D|F

PUBLIC INVOLVEMENT

Three Oaks*

SAFETY/ENVIRONMENTAL COMPLIANCE

Lee

CONSTRUCTION QUALITY MANAGEMENT

Construction Inspection
D|F

AASHTO Accredited Lab
ESP

MOT TASK FORCE GROUP

UTILITY TASK FORCE GROUP

LEGEND

BOLD, ALL CAPS, symbol: Key Personnel
* : DBE Firm
: Reporting
: Coordination/Communciation

- Design
- Quality
- Executive
- Construction
- Third Parties
- Task Force Groups

LEAD DESIGN ENGINEER

ERIC SCOT DICKEY, PE, PLS (D|F)

LEAD DESIGN ENGINEER

Roadway Design
D|F

Bridge & Seismic Design
D|F

MOT: Pavement Markings; Signing
D|F

Hydrology & Hydraulic Design
D|F

Utility Coordination & SUE
ESP

Environmental Services
Three Oaks

Geotechnical
ESP

Geotechnical Exploration
SCI

Supplemental Surveys
D|F

R/W Acquisition
D|F

CONSTRUCTION MANAGER

CHRISTOPHER ANDREW POWERS, PE (LEE)

CONSTRUCTION TEAM

Structures
Superintendent (Crew A)
Superintendent (Crew B)
Project Engineer
Project Administration Quality Control
Demolition
Pile Installation
Foundations
CIP Concrete
Beam Erection
CIP Superstructure Approach Slabs
Bridge Railings

Structures Subs
Reinforcing Steel
Pre-Drill Piles

Roadway (P&L)
Grading*
Clearing & Grubbing*
Erosion Control*
Storm Drainage*
Seeding & Mulching*
Rip Rap*

Roadway Subs
Detour Installation
Asphalt Paving
Guardrail
Pavement Markings

CONSTRUCTION COMPANY OF THE CAROLINAS, INC.

633 Eagleton Downs Drive
Pineville, NC 28134

(704) 588-5272 • (704) 588-1535 Fax
www.leecarolinas.com

Proposer's Statement

Closed and Load Restricted Bridge Package 2022 - 14
Design – Build Project - Contract ID 1162220
Cherokee County

Proposed Key Individuals, Ronald P. Shaw, Project Manager, and Primary Point of Contact, and Christopher Andrew Powers, PE, Construction Manager identified on the original organizational chart in the Lee Construction Company of the Carolinas, Inc. / Davis & Floyd, Inc. (D|F) Statement of Qualifications will be available, barring any unforeseen circumstances, at the earliest of the times and durations identified in the RFQ and RFP, until expiration of the Warranty Period, or such earlier date as the Contract is terminated or SCDOT releases, in writing, such Key Individual from this requirement.

Ronald P. Shaw, Project Manager

10-24-2022
Date

State: North Carolina
County: Mecklenburg

I, Catrina R. De Leon Estevez, a Notary Public for said County and State, do hereby certify that Ronald P. Shaw personally appeared before me this day and acknowledged the due execution of the foregoing statement.

Witness my hand and official seal, this the 24 day of October, 2022.

Catrina R. De Leon Estevez
Notary Public
My commission expires: October 11, 2025

CATRINA R DE LEON ESTEVEZ
Notary Public, North Carolina
Mecklenburg County
My Commission Expires
October 11, 2025

CONSTRUCTION COMPANY OF THE CAROLINAS, INC.

633 Eagleton Downs Drive
Pineville, NC 28134

(704) 588-5272 • (704) 588-1535 Fax
www.leecarolinas.com

Proposer's Statement

Closed and Load Restricted Bridge Package 2022 - 14
Design – Build Project - Contract ID 1162220
Cherokee County

Proposed Key Individual, Eric Scot Dickey, PE, PLS, Lead Design Engineer, identified on the original organizational chart in the Lee Construction Company of the Carolinas, Inc. / Davis & Floyd, Inc. (D|F) Statement of Qualifications will be available, barring any unforeseen circumstances, at the earliest of the times and durations identified in the RFQ and RFP, until expiration of the Warranty Period, or such earlier date as the Contract is terminated or SCDOT releases, in writing, such Key Individual from this requirement.

Ronald P. Shaw, Project Manager

10-24-2022
Date

State: North Carolina
County: Mecklenburg

I, Catrina R. De Leon Estevez, a Notary Public for said County and State, do hereby certify that Ronald P. Shaw personally appeared before me this day and acknowledged the due execution of the foregoing statement.

Witness my hand and official seal, this the 24 day of October, 2022.

Catrina R. De Leon Estevez
Notary Public
My commission expires: October 11, 2025

CATRINA R DE LEON ESTEVEZ
Notary Public, North Carolina
Mecklenburg County
My Commission Expires
October 11, 2025

CONFIDENTIAL AND PROPRIETARY INFORMATION PAGE LIST

The following page numbers contain confidential and/or proprietary information. Each of these pages has been clearly marked “confidential” in this proposal, and all confidential and proprietary information has been redacted in the redacted version.

- Page 8
- Page 9
- Page 10
- Page 73
- Page 74
- Page 75
- Page 76
- Page 77

Appendix C

Approved Formal ATCs being incorporated into the Proposer's Cost Proposal

86 over Kings Creek

CONFIDENTIAL

[redacted]

[redacted]

CONFIDENTIAL

[redacted]

CONFIDENTIAL

[redacted]

CONFIDENTIAL

[redacted]

CONFIDENTIAL

[redacted]

S-11-56 over Horse Creek

S-11-138 over Goucher Creek

S-11-226 over Unnamed Stream

S-11-106 over Suck Creek

S-11-86 over Kings Creek

Lee D|F